SOLENOID VALVES

direct operated
hung diaphragm
3/8 to 1 1/2

NC

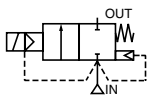

NO

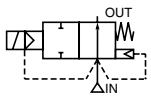

2/2
Series
210

FEATURES

- *Two way shut-off valves for the control air, inert gas, water, oil and other gases/liquids compatible with the sealing material used*
- *Valves do not require a minimum operating pressure*
- *All products are covered by Pressure Equipment Directive 97/23/EC and are suitable for group 1 and 2 fluids*
- *The solenoid valves satisfy all relevant EC directives*



C

GENERAL

Differential pressure See «SPECIFICATIONS» [1 bar =100 kPa]
Maximum viscosity 65 cSt (mm²/s)
Response time 15 - 120 ms

fluids (∗)	temperature range (TS)	seal materials (∗)
air, inert gas, water, oil	- 20°C to + 85°C	NBR (nitrile)

MATERIALS IN CONTACT WITH FLUID

(∗) Ensure that the compatibility of the fluids in contact with the materials is verified

	Brass body	Stainless steel body
Body	Brass	AISI 304 SS
Core tube	Stainless steel	Stainless steel
Core and plugnut	Stainless steel	Stainless steel
Springs	Stainless steel	Stainless steel
Seat	Brass	Stainless steel
Seals, diaphragm & disc	NBR	NBR
Disc holder (NO function)	PA	PA
Shading coil	Copper	Silver

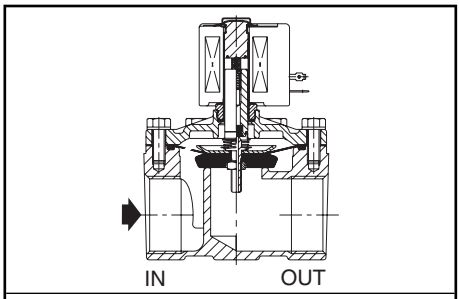

NC function

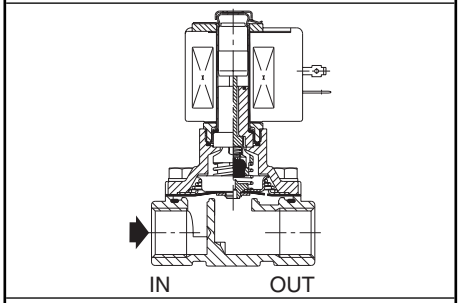

NO function

ELECTRICAL CHARACTERISTICS

Coil insulation class F or H
Connector Spade plug (cable Ø 6-10 mm)
Connector specification ISO 4400 / EN 175301-803, form A
Electrical safety IEC 335
Electrical enclosure protection Moulded IP65 (EN 60529)
Standard voltages DC (=) : 24V - 48V
(Other voltages and 60 Hz on request) AC (~) : 24V - 48V - 115V - 230V / 50 Hz

prefix option	power ratings: inrush ~ (VA)	power ratings: holding ~ (VA)	power ratings: holding ~ (W)	power ratings: hot/cold = (W)	operator ambient temperature range (TS) (C°)	replacement coil ~ 230 V/50 Hz	replacement coil = 24 V DC	type [1]
SC	5	23	10,5	9/ 11,2	-20 to + 75	400425-117	400425-142	01
	78	35	16,7	-	-20 to + 50	400425-217	-	01
	110	33,6	15,4	-	-20 to + 75	400525-117	-	02
	240	43	20	16,8/23	-20 to + 50	400525-217	400625-242	02

[1] Refer to the dimensional drawings on the following page.

SPECIFICATIONS

pipe size	orifice size	flow coefficient Kv		operating pressure differential (bar) min.	max. (PS) air (∗) ~	air (∗) =	water (∗) ~	water (∗) =	oil (∗) ~	oil (∗) =	power coil (W) ~	power coil (W) =	catalogue number brass	catalogue number stainless steel	options maintained man. operator	FPM	EPDM	CR
	(mm)	(m³/h)	(l/min)															
NC - Normally closed																		
Rp 3/8	16	2,6	43	0	9	3	9	3	-	-	10,5	11,2	**SCE210C093**	-	**MO**	**V**	**E**	**J**
Rp 1/2	16	3,4	57	0	9	3	9	3	-	-	10,5	11,2	**SCE210C094**	-	**MO**	**V**	**E**	**J**
G 1/2					9	3	9	3	9	-	16,7	11,2	-	**SCG210C087**	**MO**	**V**	**E**	**J**
Rp 3/4	19	4,3	72	0	9	3	9	3	-	-	10,5	11,2	**SCE210D095**	-	**MO**	**V**	**E**	**J**
G 3/4	16	3,9	65	0	9	3	9	3	9	-	16,7	11,2	-	**SCG210C088**	**MO**	**V**	**E**	**J**
Rp 1	25	11,1	185	0	9	6	9	6	9	6	15,4	23	**SCE210B154**	-	**MO**	**V**	**E**	**J**
G 1		9,6	160	0	9	7	9	7	9	5	15,4	23	-	**SCG210D189**	-	**V**	**E**	**J**
Rp 1 1/4	28	12,8	213	0	9	6	9	6	9	6	15,4	23	**SCE210B155**	-	**MO**	**V**	**E**	**J**
Rp 1 1/2	32	19,3	322	0	9	5	9	5	9	5	15,4	23	**SCE210B156**	-	**MO**	**V**	**E**	**J**
NO - Normally open																		
Rp 3/8	16	2,6	43	0	9	9	9	9	9	5	10,5	11,2	**SCE210C033**	-	-	**V**	**E**	**J**
Rp 1/2	16	3,4	57	0	9	9	9	9	9	5	10,5	11,2	**SCE210C034**	-	-	**V**	**E**	**J**
NPT 1/2		2,6	43	0	9	9	9	9	7	5	10,5	11,2	-	**SCB210B030**	-	**V**	**E**	**J**
Rp 3/4	19	4,7	79	0	9	9	9	9	9	5	10,5	11,2	**SCE210C035**	-	-	**V**	**E**	**J**
NPT 3/4	16	2,6	43	0	9	9	9	9	7	5	10,5	11,2	-	**SCB210B038**	-	**V**	**E**	**J**
Rp 1	25	11,2	185	0	9	-	9	-	9	-	20	-	**SCE210B057**[2]	-	-	**V**	**E**	**J**
Rp 1 1/4	28	12,8	213	0	9	-	9	-	9	-	20	-	**SCE210B058**[2]	-	-	**V**	**E**	**J**
Rp 1 1/2	32	19,3	322	0	9	-	9	-	9	-	20	-	**SCE210B059**[2]	-	-	**V**	**E**	**J**

[2] Mounting position: piping horizontal, solenoid upright.

00040GB-2006/R03
Availability, design and specifications are subject to change without notice. All rights reserved.

OPTIONS

- Valves can also be supplied with FPM (fluoroelastomer), EPDM (ethylene-propylene), CR (chloroprene) and PTFE seals and discs. Use the appropriate optional suffix letter for identification
- Waterproof enclosure with embedded screw terminal coil according to protection class IP67, CEE-10
- Explosionproof enclosures for use in zones 1/21-2/22, categories 2-3 to ATEX Directive 94/9/EC (see “Explosionproof solenoids” section)
- Electrical enclosures according to “NEMA” standards are available
- Compliance with “UL”, “CSA” and other local approvals available on request
- Mounting brackets for brass bodied valves, suffix MB (Except pipe size Rp 1, 1 1/4 and 1 1/2)
- For protection against corrosion caused by the environment or the fluid, contact us
- Other pipe connections are available on request
- Plug with visual indication and peak voltage suppression or with cable length of 2 m (see Solenoids, Coils & Accessories section)

INSTALLATION

- The solenoid valves can be mounted in any position without affecting operation, unless indicated otherwise in the specifications table.
- Stainless steel valves are standard supply with mounting brackets
- Pipe connection identifiers are: G = G (ISO 228/1), E = Rp (ISO 7/1) or B = NPT (ANSI 1.20.3)
- Installation/maintenance instructions are included with each valve

SPARE PARTS KIT & ACCESSORIES

catalogue number	spare parts kit no.		mounting bracket
	~	=	
SCE210C093/C094	**C302272**	**C302372**	**038713**
SCE210D095	**C302276**	**C302375**	**038713**
SCE210B154	**C302283**	**C133800**	**-**
SCE210B155	**C302283**	**C133801**	**-**
SCE210B156	**C302286**	**C133802**	**-**
SCE210C033/C034	**C302334**	**C302449**	**038713**
SCE210C035	**C302335**	**C302450**	**038713**
SCE210B057	**C302337**	**-**	**-**
SCE210B058	**C302339**	**-**	**-**
SCE210B059	**C302340**	**-**	**-**
SCG210C087/C088	**C302328**	**C302423**	**038713**
SCB210B030/B038	**C302347**	**C302447**	**-**
SCG210D189	**C302329**	**C133668**	**-**

(1) Standard prefixes/suffixes are also applicable to kits.
- Not available

ORDERING EXAMPLES:

SC	E	210 **C** 093		230V / 50 Hz
SC	E	210 **C** 094	**MO**	115V / 50 Hz
SC	B	210 **C** 087	**V**	24V / DC
SC	B	210 **D** 089		230V / 50 Hz

prefix
pipe thread
basic number
voltage
suffix

ORDERING EXAMPLES KITS:

C302272(1)	
C302276	**V**
C302449	**E**

basic number
suffix

DIMENSIONS (mm), WEIGHT (kg)



TYPE 01-02
Prefix “SC” Solenoid
Epoxy moulded
IEC 335 / ISO 4400
IP65

Type 01: SCE210C093/C094/D095
SCG210C087/C088
Type 02: SCE210B154/B155
SCG210D189

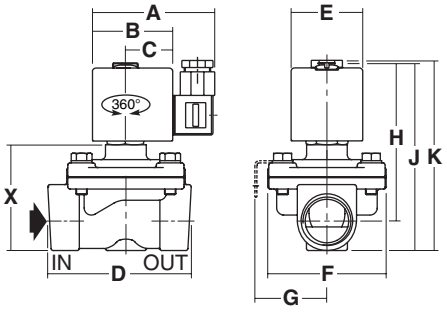

Type 01: SCE210C033/C034/C035
SCB210B030/B038
Type 02: SCB210B057/B058/B059

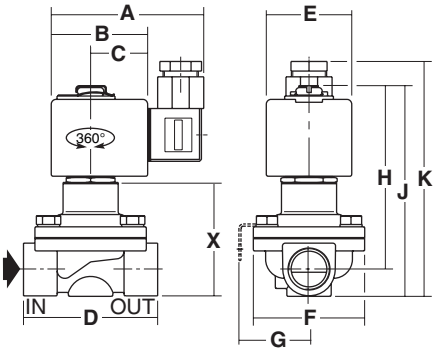

Type 02: SCE210B156

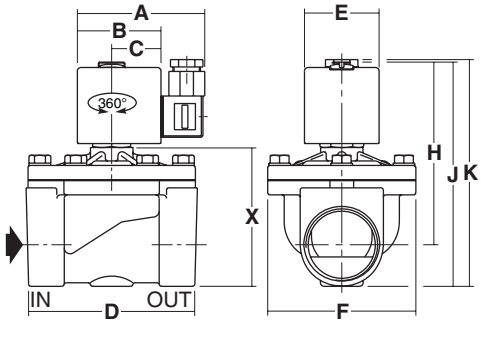

type	prefix option	catalogue number	A	B	C	D	E	F	G	H	J	K	X	weight (2)
01	SC	SCE210C093/C094	80	50	30	70	45	58	41	80	97	109	46	0,8
		SCE210D095	80	50	30	73	45	58	41	89	103	121	54	1,0
		SCG210C087/C088	80	50	30	71	45	61	41	87	105	122	55	1,0
		SCE210C033/C034	80	50	30	70	45	58	41	98	108	127	60	0,9
		SCE210C035	80	50	30	70	45	58	41	102	117	132	68	1,0
		SCB210B030/B038	80	50	30	71	45	59	41	100	116	133	67	1,0
02	SC	SCE210B156	86	56	33	111	50	99	-	125	153	158	96	2,8
		SCE210B154	86	56	33	95	50	83	-	112	129	137	75	2,0
		SCE210B155	86	56	33	95	50	83	-	112	143	148	86	2,0
		SCG210D189	86	56	33	95	50	99	56	113	133	132	77	2,2
		SCE210B057	86	56	33	95	50	83	-	155	172	157	98	2,0
		SCE210B058	86	56	33	95	50	83	-	161	187	187	130	2,0
		SCE210B059	86	56	33	111	50	99	-	167	194	194	137	2,5

(2) Incl. coil(s) and connector(s)

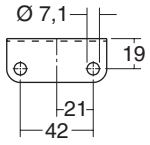

Mounting brackets
for valves: (0,3 kg)
SCE210C093/C094/D095
SCG210C087/C088/D189
SCE210C033/C034/C035

00040GB-2008/R01
Availability, design and specifications are subject to change without notice. All rights reserved.