# OY264S

## Safety light curtain

OYA0610-40-4-20-P-1

For 8-pole sockets the core colours are not standardised.
Please note the wiring of the sensor and the sockets (see data sheet).

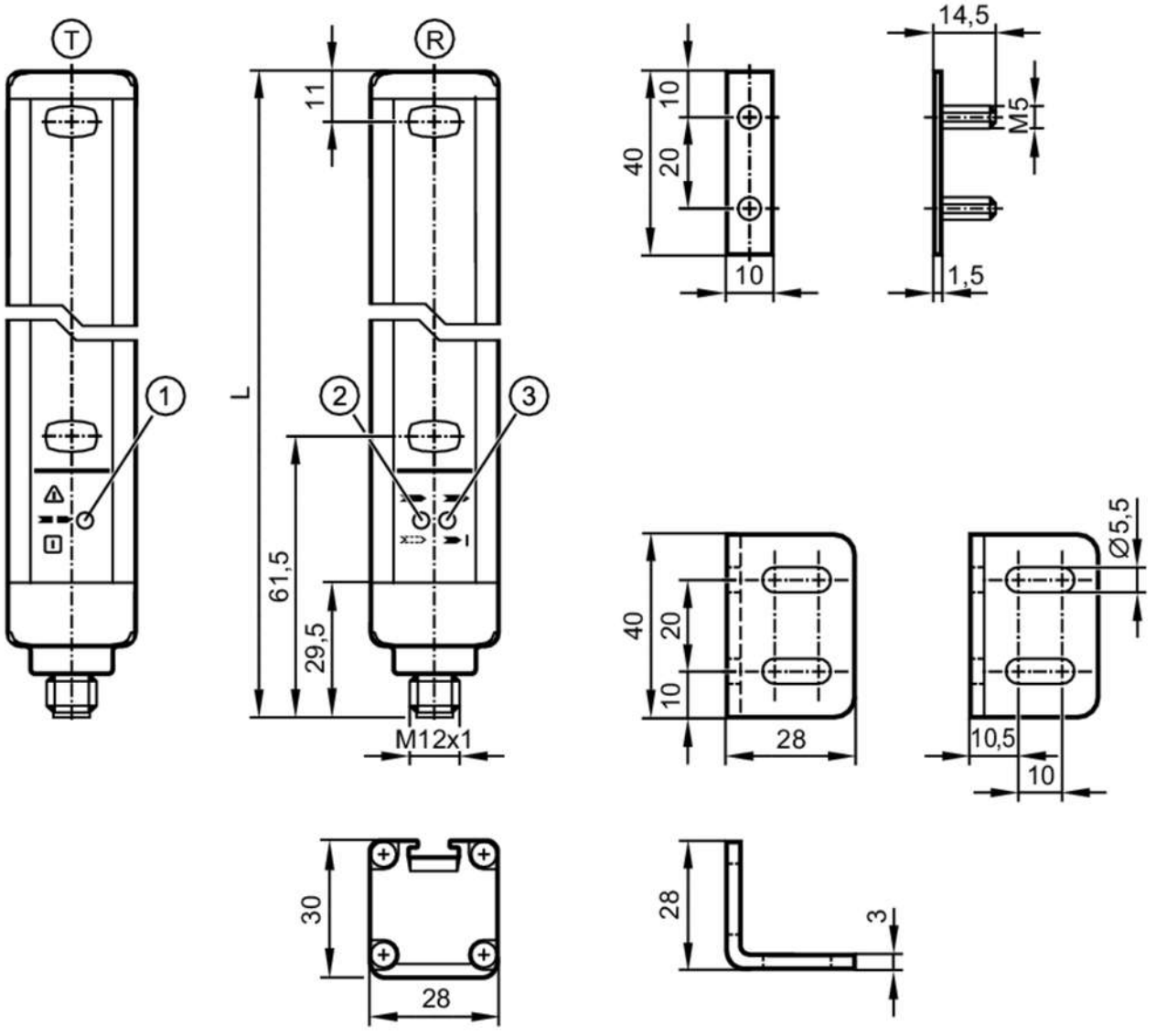


| | |
|---|---|
| T | transmitter |
| R | receiver |
| 1 | LED three-colour red / green / orange |
| 2 | LED 2-colour yellow/blue |
| 3 | LED 2-colour red/green |

| Product characteristics | |
|---|---|
| Type of light | infrared light |
| Electrical design | PNP |
| Protection | IP 65; IP 67 |
| **Application** | |
| Protective function | access prevention hand protection |

# OY264S

## Safety light curtain

OYA0610-40-4-20-P-1

| | | |
|---|---|---|
| **Electrical data** | | |
| Operating voltage tolerance | [%] | 20 |
| Operating voltage | [V] | 24 DC |
| Protection class | | III |
| Reverse polarity protection | | yes |
| Power-on delay time | [s] | < 2 |
| Type of light | | infrared light |
| Wave length | [nm] | 950 |
| Receiver | | |
| Current consumption | [mA] | 83 |
| Transmitter | | |
| Current consumption | [mA] | 42 |
| **Outputs** | | |
| Electrical design | | PNP |
| Number of OSSD outputs | | 2 |
| Max. current load per OSSD output | [mA] | 400;  (24 V) |
| Short-circuit protection | | yes |
| **Detection zone** | | |
| Protected area height | [mm] | 610 |
| Resolution (detection capacity d) | [mm] | 40 |
| Protection area width (low light intensity) | [m] | 0...10 |
| Protection area width (high light intensity) | [m] | 3...20 |
| **Response times** | | |
| Response time | [ms] | 4.5 |
| **Operating conditions** | | |
| Applications | | class C to EN 60654-1 weatherproof application |
| Ambient temperature | [°C] | -10...55 |
| Max. relative air humidity | [%] | 95 |
| Protection | | IP 65; IP 67 |
| **Tests / approvals** | | |
| EMC | | IEC 61496-1 |
| Shock resistance | | IEC 61496-1 |
| Vibration resistance | | IEC 61496-1 |
| **Safety classification** | | |
| ESPE type (IEC 61496-1) | | 4 |
| Complies with the requirements | | ISO 13849-1: 2015 category 4, PL e |
| | | IEC 61508 SIL 3 |
| | | IEC 62061 SIL 3 |
| Mission time TM | [h] | 175200 |
| PFH | [1/h] | 1,2E-08 |

# OY264S

## Safety light curtain

OYA0610-40-4-20-P-1

| Mechanical data | | |
|---|---|---|
| Weight | [g] | 2460 |
| Dimensions | [mm] | 663 x 28 x 30 |
| Materials | | housing: aluminium; front pane: PC |
| Length L | [mm] | 663 |

| Displays / operating elements | |
|---|---|
| Display | LED, yellow |
| | LED, green |
| | LED, red |
| | LED, blue |
| | LED, orange |

| Accessories | |
|---|---|
| Items supplied | mounting bracket: 4 |
| | slot nuts: 4 |
| | Nuts |

| Remarks | |
|---|---|
| Pack quantity | 1 pcs. |

**Electrical connection - receiver**

Connector: 1 x M12; coding: A; Maximum cable length: 100 m; for wire cross-section 0.34 mm²




Connection

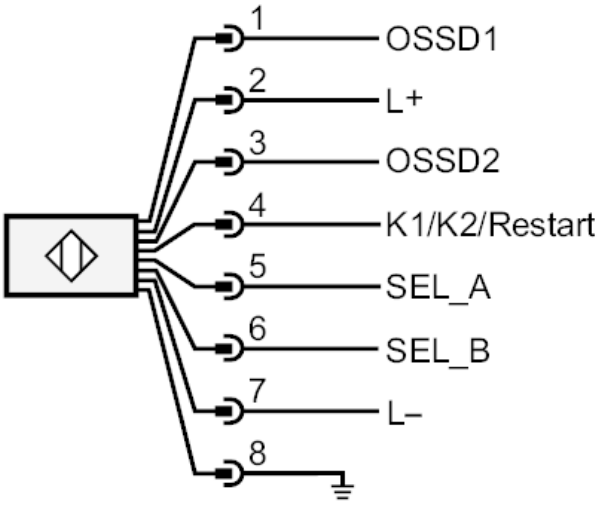

# OY264S

## Safety light curtain

OYA0610-40-4-20-P-1

### Electrical connection - transmitter

Connector: 1 x M12; coding: A

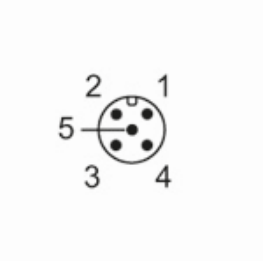


### Connection

