30118-341 FRONT PANEL, FLAT, UNSHIELDED, D-SUB CUTOUT, 3 U, 4 HP, 1 X 9 PIN, 2.5 MM, AL, FRONT ANODIZED, REAR CONDUCTIVE

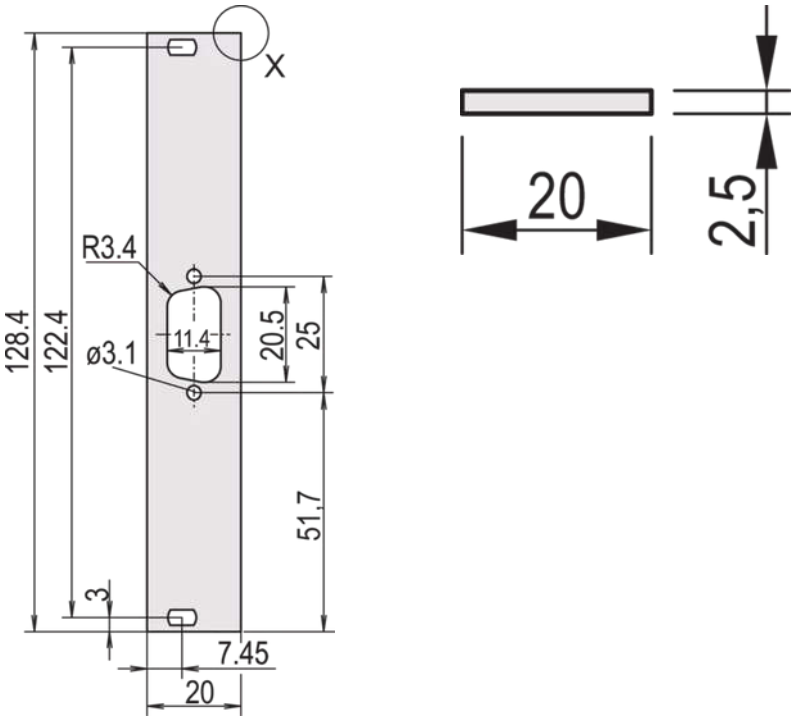

KEY FEATURES

Non-shielded version

Al, 2.5 mm, front anodized, rear conductive

PRODUCT ATTRIBUTES

Product Type: Front Panel

Type: Front Panel without Handle

Accessory Type: Front panel

Mounting: Screw-on Front

EMC Shielding: No

Material: Aluminum

Front Finish: Anodized

Rear Finish: Conductive
Treated Edges: No
Rack Height: 3 U
Height: 128.4 mm
Rack Width: 4 HP
Width: 19.98 mm
Depth: 2.5 mm
Complies With: IEC 60297-3-101; IEEE 1101.1/10
Package Quantity: 5

ADDITIONAL PRODUCT DETAILS

Flat front panel with cutout for D-Sub connectors. Unshielded version.

Delivery is in standard pack multiples. Pricing is per individual item.

Please order fixing material (sleeves, collar screws) separately.

Please take into consideration that deliveries may be carried out in the stated SPQs (SPQ, e.g. 5 pieces, 10 pieces, 50 pieces, etc.). Differing order quantities (e.g. 2 pieces) may be changed to the next possible delivery quantity = Standard Pack Quantity.

CERTIFICATIONS

RoHS COMPLIANT

North America
All locations
+1.763.422.2661
Chat with us:
schroff.nvent.com

Europe
Straubenhardt, Germany
+49.7082.794.0
Betschdorf, France
+33.3.88.90.64.90
Warsaw, Poland
+48.22.209.98.35
Assago, Italy
+39.02.932.7141
Chat with us:
schroff.nvent.com

Asia
Shanghai, China
+86.21.2412.6943
Qingdao, China
+86.532.8771.6101
Singapore
+65.6768.5800
Shin-Yokohama, Japan
+81.45.476.0271
Chat with us:
schroff.nvent.com

Middle East & India
Dubai, United Arab Emirates
+971.4.378.1700
Bangalore, India
+91.80.6715.2001
Istanbul, Turkey
+90.216.250.7374
Chat with us:
schroff.nvent.com

nVent

Our powerful portfolio of brands:
nVent.com **CADDY ERICO HOFFMAN RAYCHEM SCHROFF TRACER**

© 2024 nVent. All nVent marks and logos are owned or licensed by nVent Services GmbH or its affiliates. All other trademarks are the property of their respective owners.

nVent reserves the right to change specifications without notice.