EVF333

Y connection cable

YDOAH040VAS0002P04STGH050VAS

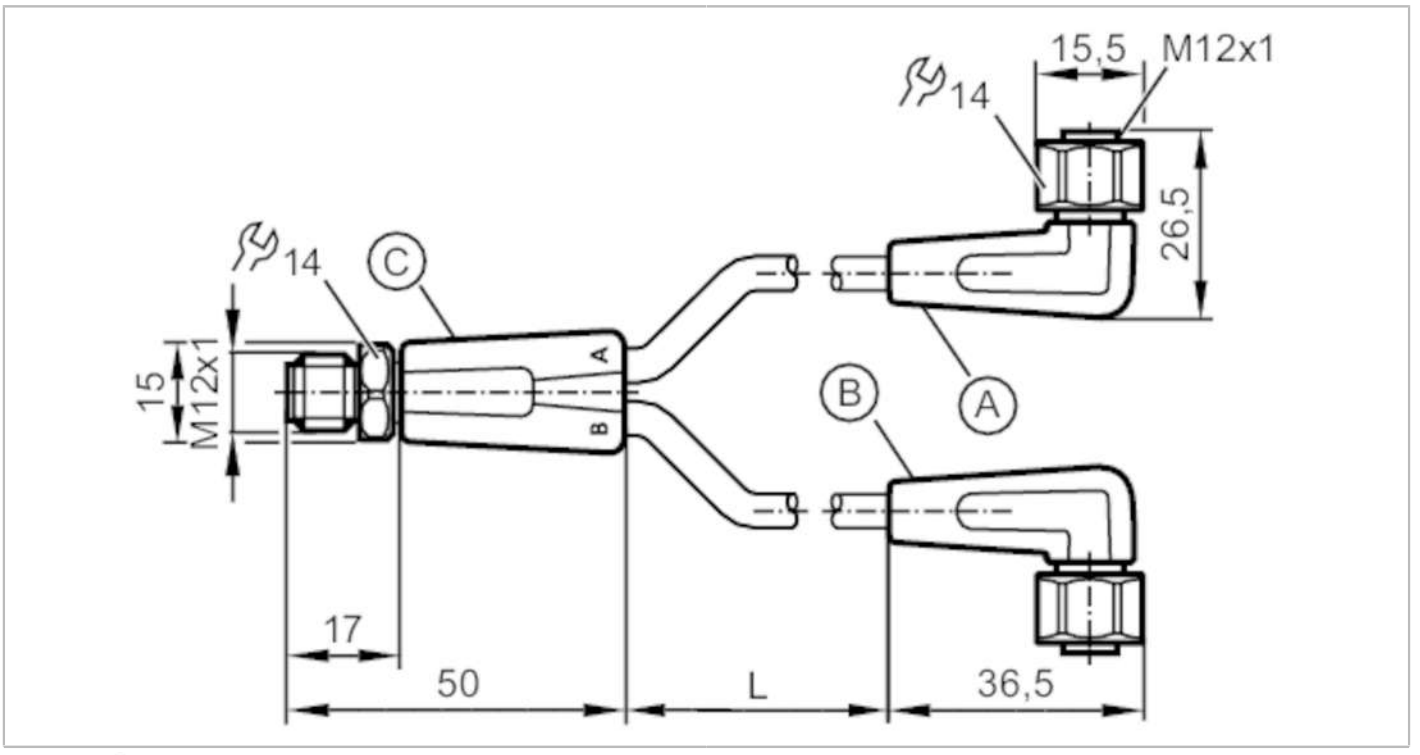

Application			
Special feature		Free from silicone; Halogen-free; Gold-plated contacts; Drag chain suitability	
Application		hygienic and wet areas in the food industry	
Free from silicone		yes	
Electrical data			
Operating voltage	[V]	< 60 AC/DC	
Protection class		II	
Max. current load total	[A]	4	
Operating conditions			
Ambient temperature	[°C]	-25...100	
Ambient temperature (moving)	[°C]	5...100	
Storage temperature	[°C]	-25...55	
Storage humidity	[%]	10...100	
Other climatic conditions for storage according to stated class		1K22/ DIN 60721-3-1	
Protection		IP 65; IP 67; IP 68; IP 69K	
Tests / approvals			
UL approval		Ta	65 °C
Mechanical data			
Weight	[g]	159.2	
Moulded-body material		PP	
Material nut		stainless steel (1.4404 / 316L)	

EVF333

Y connection cable

YDOAH040VAS0002P04STGH050VAS

Sealing material	EPDM	
Number of ports splitter box	2	
Drag chain suitability	yes	
Drag chain suitability	bending radius for flexible use	min. 10 x cable diameter
	travel speed	max. 3.3 m/s for a horizontal travel length of 5 m and max. acceleration of 5 m/s²
	bending cycles	> 1 Mio.
	torsional strain	± 180 °/m

Remarks

Pack quantity	1 pcs.

Electrical connection

Cable: 2 m, MPPE, Halogen-free, grey, Ø 4.9 mm; 4 x 0.34 mm² (42 x Ø 0.1 mm)

Electrical connection - plug

Connector: 1 x M12, straight; coding: A; Moulded body: PP, grey; Locking: stainless steel (1.4404 / 316L); Contacts: gold-plated; Tightening torque: 0.6...1.2 Nm

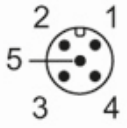

Connection

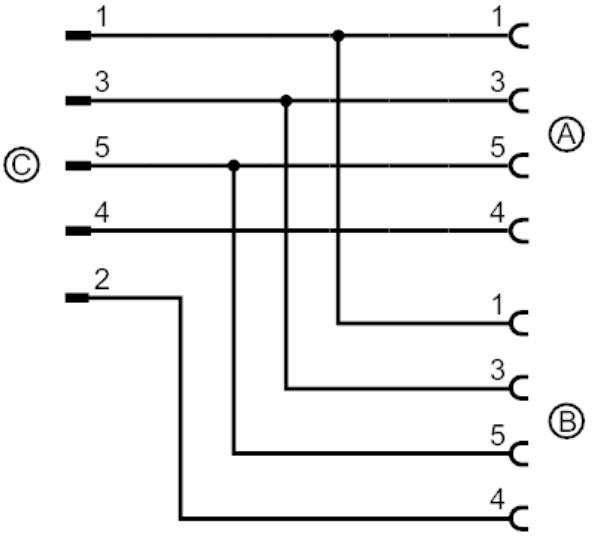

EVF333

Y connection cable

YDOAH040VAS0002P04STGH050VAS

Electrical connection - socket

Connector: 2 x M12, angled; coding: A; Moulded body: PP, grey; Locking: stainless steel (1.4404 / 316L); Sealing: EPDM; Contacts: gold-plated; Tightening torque: 0.6...1.5 Nm

