Your Expert Partner for **Human Machine Interfaces**

Indicator

Distribution by
Rs-online

17-240354



https://rs-online.eao.com/component/17-240354...

Your product:



17-240354
Indicator

FRONT

Front dimension:	Ø 16 mm
Front form:	Round
Reflector:	Metal, polished chromium-plated

MOUNTING

Design:	Raised
Mounting cut-out:	Ø 14 mm
Mounting type:	Panel mounting

OPERATING-/INDICATION PART

Lens:	round
Illumination colour:	Red / Yellow / Green

ELECTRICAL CHARACTERISTICS

Operating voltage:	24 V DC ±10 %
Operation current:	9 - 17 mA ±15 %
Lumi. Intensity:	90/60/150 mcd
Polarity:	Anode (+) Brass plug-in connector Cathode (-) Brass tinned plug-in connector

MECHANICAL CHARACTERISTICS

Terminal:	Plug-in terminal, 2.8 x 0.8 mm
Tightening torque:	Fixing nut max. 0.2 Nm

Weight:	0.014 kg

AMBIENT CONDITION

IP Protection:	IP40 front side, IP65 front side, according to IEC 60529
Operating temperature:	– 20 °C ... + 60 °C
Storage temperature:	– 25 °C ... + 80 °C

CERTIFICATE

Approbations:	UL
Conformities:	2011 / 65 / EC (RoHS), 2014 / 35 / EU (230 VAC)
REACH:	REACH compliant
RoHS:	RoHS compliant

OTHER

Short Description:	Indicator, Ø 14 mm, Ø 16 mm, Round, Plug-in terminal, 2.8 x 0.8 mm, Red / Yellow / Green
Kind of illlumination:	Tri-colour-LED
Product attributes:	Tri-colour LED
Hints:	Connectors: Brass terminal = anode (+); brass tinned terminal = cathode (-) IP67 front side gap between LED and reflector and gap between reflector and frontplate sealed to IP67 when using the supplied gasket. The plastic is limited resistant to chemicals.
Wiring diagrams:	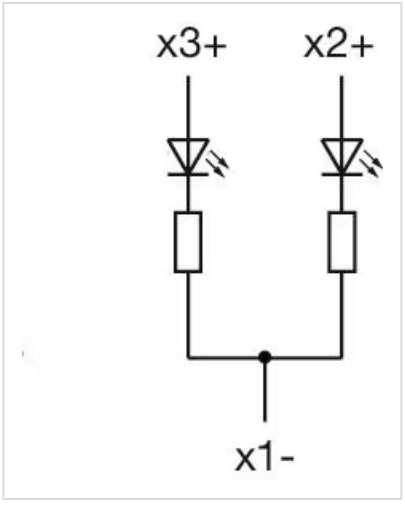

Component layouts:

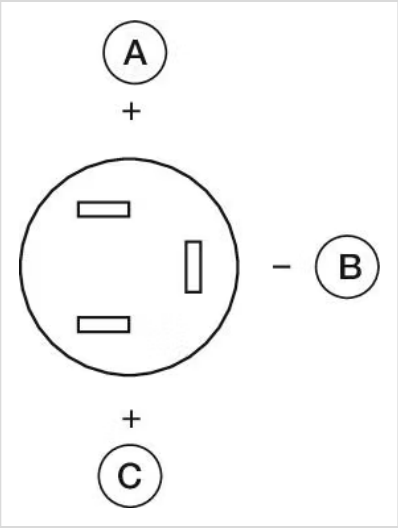

A = Red
B = common cathode
C = Green

Mounting cut-outs:

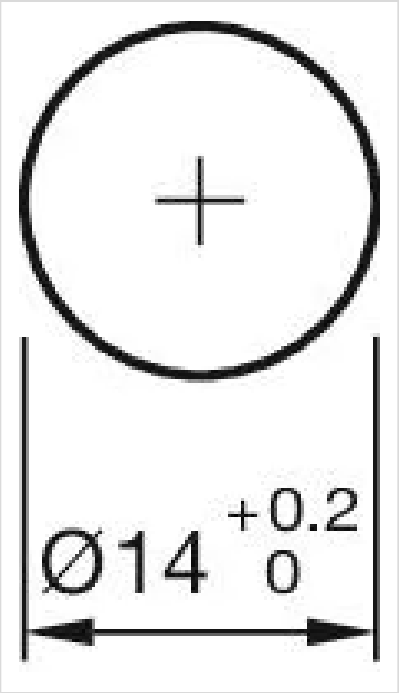

Dimension drawings:

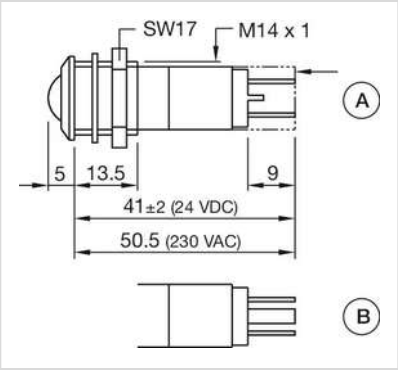

A = Protection tube (only 230 VAC)
B = Tri-colour