JUMO GmbH & Co. KG
Delivery address: Mackenrodtstraße 14
36039 Fulda, Germany
Postal address: 36035 Fulda, Germany
Phone: +49 661 6003-0
Fax: +49 661 6003-607
Email: mail@jumo.net
Internet: www.jumo.net

JUMO UK LTD
JUMO House
Temple Bank, Riverway
Harlow, Essex, CM20 2DY, UK
Phone: +44 1279 63 55 33
Fax: +44 1279 62 50 29
Email: sales@jumo.co.uk
Internet: www.jumo.co.uk

JUMO Process Control, Inc.
6724 Joy Road
East Syracuse, NY 13057, USA
Phone: +1 315 437 5866
Fax: +1 315 437 5860
Email: info.us@jumo.net
Internet: www.jumousa.com

Exhaust gas temperature monitor STM-RW-2

Areas of application

- Wood stoves
- Powder coatings
- Smokehouses, roasting plants

Special features

- Integrated microswitch
- Contact reliability
- Die-cast aluminum housing

Description

The device is an exhaust gas temperature monitor and is used to monitor the exhaust gas temperature of solid fuel boilers in bivalent operation with oil-fired boilers. It is also used to interlock ventilation systems that cause negative pressure in combination with tiled stoves and fireplaces.



Type 601540

JUMO GmbH & Co. KG
Delivery address: Mackenrodtstraße 14
36039 Fulda, Germany
Postal address: 36035 Fulda, Germany
Phone: +49 661 6003-0
Fax: +49 661 6003-607
Email: mail@jumo.net
Internet: www.jumo.net

JUMO UK LTD
JUMO House
Temple Bank, Riverway
Harlow, Essex, CM20 2DY, UK
Phone: +44 1279 63 55 33
Fax: +44 1279 62 50 29
Email: sales@jumo.co.uk
Internet: www.jumo.co.uk

JUMO Process Control, Inc.
6724 Joy Road
East Syracuse, NY 13057, USA
Phone: +1 315 437 5866
Fax: +1 315 437 5860
Email: info.us@jumo.net
Internet: www.jumousa.com

Approval marks and certificates

Certificates for approved device versions are available for download on the manufacturer's website.

Russian documentation upon request.

Technical data

Electrical data

Switching element	Microswitch with changeover contact
Maximum permissible switching capacity	AC 230 V +10 %, 10(2) A, cos φ = 1 (0.6) DC 230 V +10 %, 0.25 A
Recommended minimum load	AC/DC 24 V, 20 mA
Rated surge voltage	2500 V (via switching contacts 400 V)
Overvoltage category	II
Limit value range	40 to 120 °C (per default 100 °C) 20 to 400 °C (per default 120 °C)

Environmental influences

Switching differential	
40 to 120 °C	10 to 18 K
20 to 400 °C	10 to 22 K
Switching point accuracy referred to switch off point	
40 to 120 °C	
Scale beginning	+0/-10 K
Scale end	+0/-10 K
20 to 400 °C	
Scale beginning	+0/-15 K
Scale end	+0/-20 K
Time constant	
Exhaust gas	≤ 45 sec.
Average ambient temperature influence	
Switching point displacement,referred to the deviation from 22 °C	~ 0.07 K/K
Admissible ambiant temperature	
At the sensor	Max. 700 °C
At the switch head	Max. 80 °C, mind. -50 °C
Admissible storage temperature	Max. 80 °C, mind. -50 °C
Setpoint value adjustment	After removing the housing cover via the inner scale
Rated position (NL)	DIN 16257, NL 0 to NL 90 (other NL upon request)

JUMO GmbH & Co. KG
Delivery address: Mackenrodtstraße 14
36039 Fulda, Germany
Postal address: 36035 Fulda, Germany
Phone: +49 661 6003-0
Fax: +49 661 6003-607
Email: mail@jumo.net
Internet: www.jumo.net

JUMO UK LTD
JUMO House
Temple Bank, Riverway
Harlow, Essex, CM20 2DY, UK
Phone: +44 1279 63 55 33
Fax: +44 1279 62 50 29
Email: sales@jumo.co.uk
Internet: www.jumo.co.uk

JUMO Process Control, Inc.
6724 Joy Road
East Syracuse, NY 13057, USA
Phone: +1 315 437 5866
Fax: +1 315 437 5860
Email: info.us@jumo.net
Internet: www.jumousa.com

Mechanical features

Case

Material	Die-cast aluminum
Surface	Impact-resistant textured coating
Lid	RAL 7032
Lower section	RAL 7015
Cable inlet	Self-sealing grommet M20 × 1,5
Protection type	DIN EN 60529, IP54
Weight	Approx. 800 g

Process connection

Material	Steel
Connection type	„DZ“ G 1/2 (fixed hexagon with external thread)

Immersion tube

Material	Steel
Dimensions	15 mm × 150 mm

JUMO GmbH & Co. KG
Delivery address: Mackenrodtstraße 14
36039 Fulda, Germany
Postal address: 36035 Fulda, Germany
Phone: +49 661 6003-0
Fax: +49 661 6003-607
Email: mail@jumo.net
Internet: www.jumo.net

JUMO UK LTD
JUMO House
Temple Bank, Riverway
Harlow, Essex, CM20 2DY, UK
Phone: +44 1279 63 55 33
Fax: +44 1279 62 50 29
Email: sales@jumo.co.uk
Internet: www.jumo.co.uk

JUMO Process Control, Inc.
6724 Joy Road
East Syracuse, NY 13057, USA
Phone: +1 315 437 5866
Fax: +1 315 437 5860
Email: info.us@jumo.net
Internet: www.jumousa.com

Dimensions

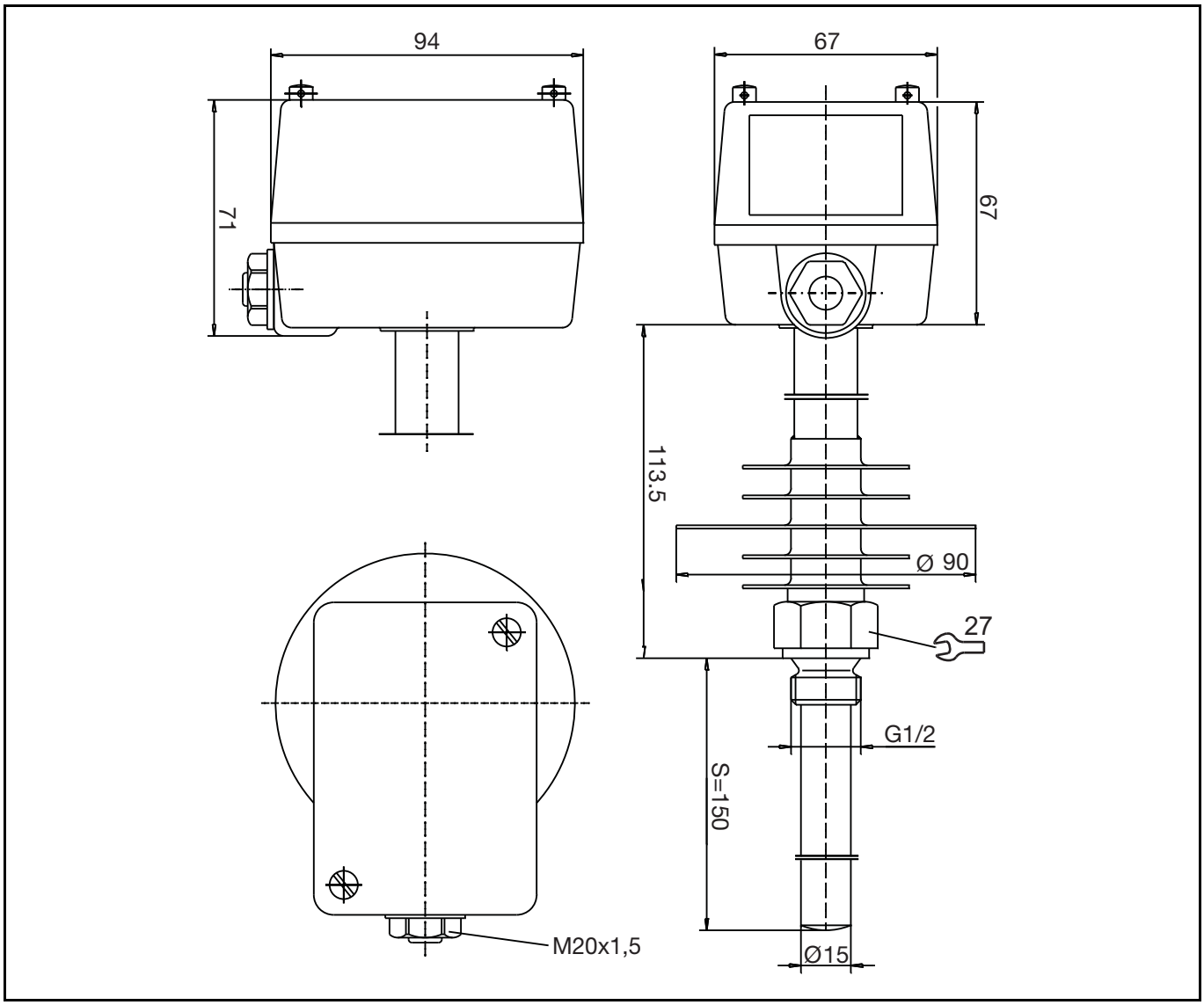

JUMO GmbH & Co. KG
Delivery address: Mackenrodtstraße 14
36039 Fulda, Germany
Postal address: 36035 Fulda, Germany
Phone: +49 661 6003-0
Fax: +49 661 6003-607
Email: mail@jumo.net
Internet: www.jumo.net

JUMO UK LTD
JUMO House
Temple Bank, Riverway
Harlow, Essex, CM20 2DY, UK
Phone: +44 1279 63 55 33
Fax: +44 1279 62 50 29
Email: sales@jumo.co.uk
Internet: www.jumo.co.uk

JUMO Process Control, Inc.
6724 Joy Road
East Syracuse, NY 13057, USA
Phone: +1 315 437 5866
Fax: +1 315 437 5860
Email: info.us@jumo.net
Internet: www.jumousa.com

Connection diagram

The connection diagram in the data sheet provides information on product selection.

For the electrical connection, only use the installation instructions or the operating manual.

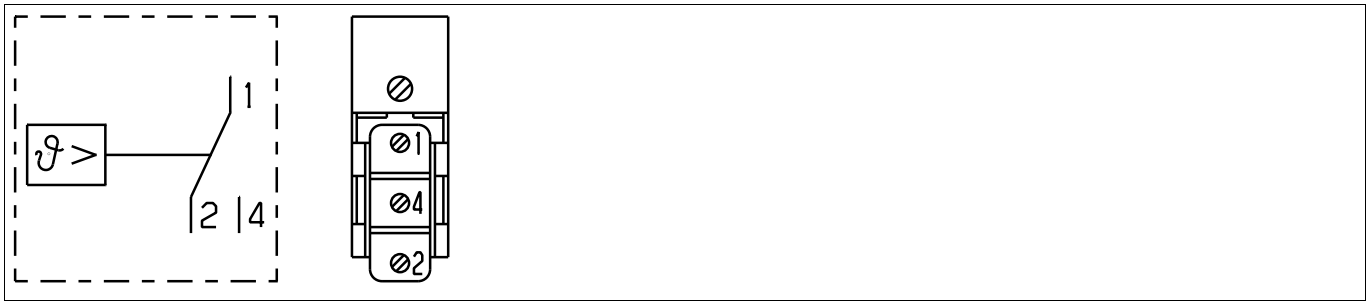

JUMO GmbH & Co. KG
Delivery address: Mackenrodtstraße 14
36039 Fulda, Germany
Postal address: 36035 Fulda, Germany
Phone: +49 661 6003-0
Fax: +49 661 6003-607
Email: mail@jumo.net
Internet: www.jumo.net

JUMO UK LTD
JUMO House
Temple Bank, Riverway
Harlow, Essex, CM20 2DY, UK
Phone: +44 1279 63 55 33
Fax: +44 1279 62 50 29
Email: sales@jumo.co.uk
Internet: www.jumo.co.uk

JUMO Process Control, Inc.
6724 Joy Road
East Syracuse, NY 13057, USA
Phone: +1 315 437 5866
Fax: +1 315 437 5860
Email: info.us@jumo.net
Internet: www.jumousa.com

Order details

	(1)	Basic type
601540		STM-RW-2 – Exhaust gas temperature monitor (ATW)
	(2)	**Control range 1**
045		20 to 400 °C
056		40 to 120 °C
	(3)	**Process connection**
048		Immersion tube for screwing in with fixed hexagon and external thread
	(4)	**Process connection thread type**
13		G 1/2
	(5)	**Process connection material**
01		Steel
	(6)	**Insertion length**
150		150 mm
	(7)	**Protection tube diameter**
15		15 mm

	(1)		(2)		(3)		(4)		(5)		(6)		(7)
Order code		/		-		-		-		-		-	
Order example	601540	/	056	-	048	-	13	-	01	-	150	-	15

Stock versions

Order code	Part no.
601540/056-048-13-01-150-15/000	60000903
601540/045-048-13-01-150-15/000	60001115