22312 E

SKF Explorer

Dimensions

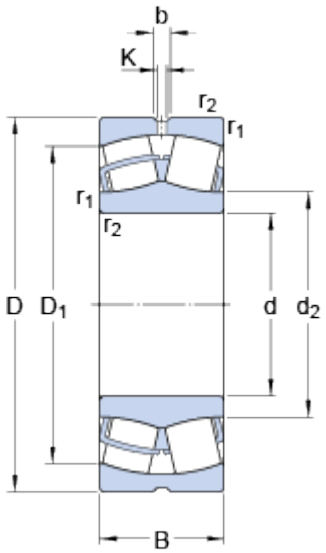

d		60	mm
D		130	mm
B		46	mm
d_2	≈	77.9	mm
D_1	≈	110	mm
b		8.3	mm
K		4.5	mm
$r_{1,2}$	min.	2.1	mm

Abutment dimensions

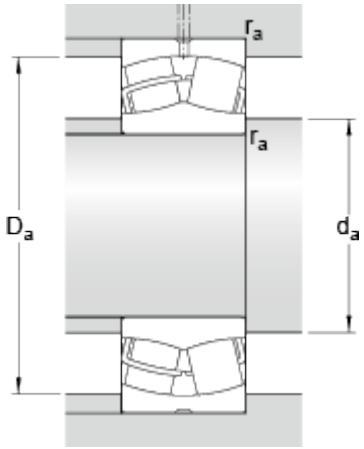

d_a	min.	72	mm
D_a	max.	118	mm
r_a	max.	2	mm

Calculation data

Basic dynamic load rating	C	325	kN
Basic static load rating	C_0	335	kN
Fatigue load limit	P_u	36	kN
Reference speed		4000	r/min
Limiting speed		5300	r/min
Calculation factor	e	0.35	
Calculation factor	Y_1	1.9	
Calculation factor	Y_2	2.9	
Calculation factor	Y_0	1.8	

Mass

Mass	3.1	kg