Type: LXPRF

Phase Failure, Phase Sequence and Under Voltage

Terminal Protection to IP20



Dims: to DIN 43880
W. 17.5mm

- ❑ ***NEW*** **17.5mm DIN rail housing**
- ❑ **Microprocessor based**
- ❑ **True R.M.S. monitoring**
- ❑ **Monitors own supply and detects an Under voltage condition on one or more phases**
- ❑ **Measures phase to phase voltages**
- ❑ **Detects incorrect phase sequence and phase loss**
- ❑ **Fixed Under voltage trip level**
- ❑ **Fixed Time delay**
- ❑ **1 x SPDT relay output 8A**
- ❑ **Green LED indication for supply status**
- ❑ **Red LED indication for relay status**

ISO 9001:2015
Cert. No. 14125771

FUNCTION DIAGRAM

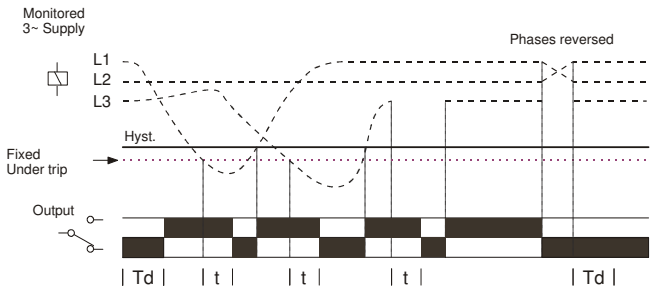

INSTALLATION AND SETTING

Installation work must be carried out by qualified personnel.

- BEFORE INSTALLATION, ISOLATE THE SUPPLY.
- Connect the unit as required. The Connection Diagram below shows a typical installation, whereby the supply to a load is being monitored by the Phase monitoring relay. If a fault should occur (i.e. fuse blowing), the relay will de-energise and assuming control of the external Contactor, de-energise the Contactor as well.

Applying power.

- Apply power and the green "Power supply" ❶ and red "Relay" ❷ LED's will illuminate, relay energise and contacts 15 and 18 will close. Refer to the troubleshooting table if the unit fails to operate correctly.

Note:

If the supply voltage increases above the maximum supply/monitoring voltage range by approx. 10% or more, the relay will de-energise immediately.

This device is not suitable for applications where there could be a percentage of re-generative voltage present during a fault condition, i.e. fuse failure. During these conditions a monitor that includes an adjustable under voltage trip level is necessary which allows this type of fault to be detected. It is therefore recommended that the LXPRT or LXPRT-4W phase monitors be considered.

Troubleshooting.

The table below shows the status of the unit during a fault condition.

Supply fault	Green LED	Red LED	Relay
Phase missing	On	Off	De-energised
Phases reversed (no delay)	Flashing	Off	De-energised
Phase below 70% of Un (fixed under trip level [2])	On	Off	De-energised

TECHNICAL SPECIFICATION

Supply/monitoring voltage		
U* **(L1, L2, L3):**	77 - 143V, 161 - 300V, 280 – 520V[1] AC	
Frequency range:	48 – 63Hz	
Supply variation:	± 30%	
Overvoltage category:	III (IEC 60664)	
Rated impulse withstand voltage:	[1]4kV (1.2/50µS) IEC 60664	
Power consumption (max.):	8VA	
Monitoring mode:	Under voltage	
Trip level (fixed) ± 2%:	Under	
Supply voltage 77 – 143V:	77V	
161 – 300V:	161V	
280 – 520V:	280V	
Hysteresis:	≈ 2% of trip level (factory set)	
Repeat accuracy:	± 0.5% at constant conditions	
Immunity from micro power cuts:	<50mS	
Response time:	≈ 50mS	
Time delay (t):	≈ 100mS	
	Note: actual delay (t) = delay + response time	
Delay from Phase loss (tr):	≈ 150mS (worst case = tr x 2)	
Power on delay (Td):	≈ 1 sec. (worst case = Td x 2)	
Power on indication:	Green LED	
Relay status indication:	Red LED	
Ambient temp:	-20 to +60°C	
Relative humidity:	+95% max.	
Output **(15, 16, 18)**:	SPDT relay	
Output rating:	AC1	250V 8A (2000VA)
	AC15	250V 5A (no), 3A (nc)
	DC1	25V 8A (200W)
Electrical life:	≥ 150,000 ops at rated load	
Dielectric voltage:	2kV AC (rms) IEC 60947-1	
Rated impulse withstand voltage:	4kV (1.2/50µS) IEC 60664	
Housing:	Orange flame retardant UL94 V0	
Weight:	75g	
Mounting option:	On to 35mm symmetric DIN rail to BS EN 60715 or direct surface mounting via 2 x M3.5 or 4BA screws using the black clips provided on the rear of the unit.	
Terminal conductor size	≤ 2 x 2.5mm² solid or stranded	
Approvals:	Conforms to IEC.	

* Please state Supply/monitoring voltage when ordering

UL LISTED IND. CONT. EQ. E111187

CE, and RoHS Compliant.
EMC: Immunity: EN 61000-6-2 (EN 61000-4-3 15V/m 80MHz - 2.7GHz)
Emissions: EN 61000-6-4

CONNECTION DIAGRAM

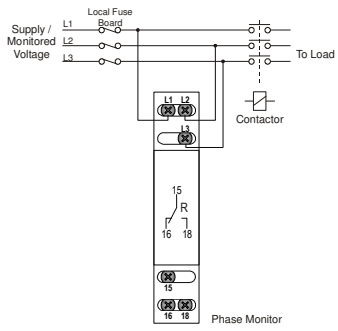

SETTING DETAILS

1. Power supply status (Green) LED
2. Relay output (Red) LED

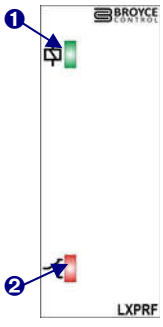

DIMENSIONS

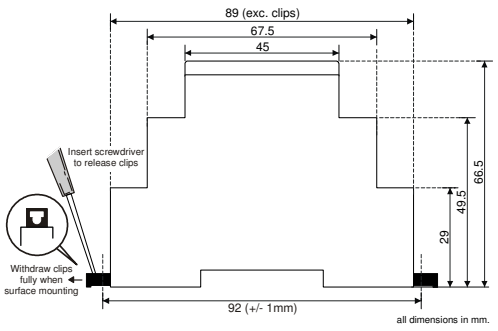

Broyce Control Ltd., Pool Street, Wolverhampton, West Midlands WV2 4HN. England
Tel: +44 (0) 1902 773746 Fax: +44 (0) 1902 420639 Email: sales@broycecontrol.com Web: www.broycecontrol.com

The Information provided in this literature is believed to be accurate (subject to change without prior notice); however, use of such information shall be entirely at the user's own risk.