DATASHEET



T3C 236-11Z-ST

- Connector M12, 4-pole
- Thermoplastic enclosure
- Double-insulated
- Good resistance to oil and petroleum spirit
- 30 mm x 88,5 mm x 30 mm
- Actuator heads can be repositioned by 4 x 90°

Data

Ordering data

Product type description	T3C 236-11Z-ST
Article number (order number)	101212224
EAN (European Article Number)	4030661392660
eCl@ss number, Version 9.0	27-27-06-01
eCl@ss number, Version 11.0	27-27-06-01
ETIM number, version 7.0	EC000030
ETIM number, version 6.0	EC000030

Approval - Standards

Certificates	cULus CCC EAC

General data

Enclosure material	Plastic, glass-fibre reinforced thermoplastic, self-extinguishing
Material of the contacts, electrical	Silver
Lever material	Stainless steel
Gross weight	70 g

General data - Features

Number of auxiliary contacts	1
Number of safety contacts	1

Safety appraisal

Standards	BG-GS-ET-15 EN ISO 13849-1 EN 60947-5-1
Mission Time	20 Year(s)

Safety appraisal - Safety outputs

B10d Normally-closed contact (NC)	20,000,000 Operations

Mechanical data

Actuating element	Swivel lever
Mechanical life, minimum	1,000,000 Operations
Positive break angle	12.5 °
Positive break torque	0.2 Nm
Opening angle	180°

Mechanical data - Connection technique

Terminal Connector	Connector M12

Mechanical data - Dimensions

Length of sensor	30 mm
Width of sensor	93 mm
Height of sensor	94.5 mm
Height of the actuator	78 mm

Ambient conditions

Degree of protection	IP67
Ambient temperature, minimum	-30 °C
Ambient temperature, maximum	+80 °C

Ambient conditions - Insulation value

Rated insulation voltage U_i	50 V
Rated impulse withstand voltage U_{imp}	0.8 kV

Electrical data

Thermal test current	10 A
Utilisation category AC-15	50 VAC
Utilisation category AC-15	4 A
Utilisation category DC-13	24 VDC
Utilisation category DC-13	1 A
Switching element	NO contact, NC contact
Switching principle	Creep circuit element
Switching frequency	5,000 /h

Ordering code

Product type description:
T(1)C 236-(2)Z-(3)

(1)

3	left-hand model
4	Swing-door version
5	right-hand model

(2)

01	1 NC contact
02	2 NC contact
11	1 NO contacts/1 NC contact

(3)

without	Cable entry M20
ST	M12 connector with A-coding
ST-2310	M12 connector with B-coding

Pictures

Product picture (catalogue individual photo)



ID: k2363f02
| 213.8 kB | .jpg | 102.658 x 248.003 mm - 291 x 703 px - 72 dpi
| 162.0 kB | .png | 74.083 x 178.858 mm - 210 x 507 px - 72 dpi

Dimensional drawing basic component

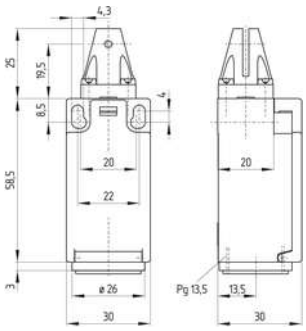

ID: kc236g01
| 50.2 kB | .cdr |
| 5.1 kB | .png | 73.731 x 79.375 mm - 209 x 225 px - 72 dpi
| 161.8 kB | .jpg | 352.778 x 379.589 mm - 1000 x 1076 px - 72 dpi

Dimensional drawing actuator

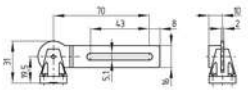

ID: 1c235b01
| 3.0 kB | .png | 74.083 x 52.211 mm - 210 x 148 px - 72 dpi
| 58.3 kB | .jpg | 352.778 x 248.003 mm - 1000 x 703 px - 72 dpi

Diagram

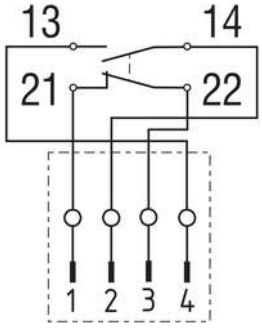

ID: kaz16k05
| 23.1 kB | .cdr |
| 117.1 kB | .jpg | 352.778 x 440.972 mm - 1000 x 1250 px - 72 dpi