

Retroreflective sensor

RLK29-55/59/116

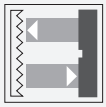

- Robust, compact photoelectric sensor for single-beam gate protection
- Not sensitive to ambient light, even with energy saving lamps
- Tamper-proof, no operating controls
- Version for universal voltages
- Relay output

Robust, compact, long range photoelectric sensors for detecting people, objects and vehicles

Function

Series 29 is a range of low-cost and, most importantly, reliable photoelectric sensors for monitoring industrial doors, elevators, and automatic gates. Their high degree of protection makes them the ideal solution for tasks outdoors and at thresholds, and in harsh environments. These "universal-voltage sensors" can be operated with any supply voltage from 24 V to 240 V, and with direct current or alternating current.

Release date: 2020-12-10 Date of issue: 2020-12-10 Filename: 114642_eng.pdf

Dimensions

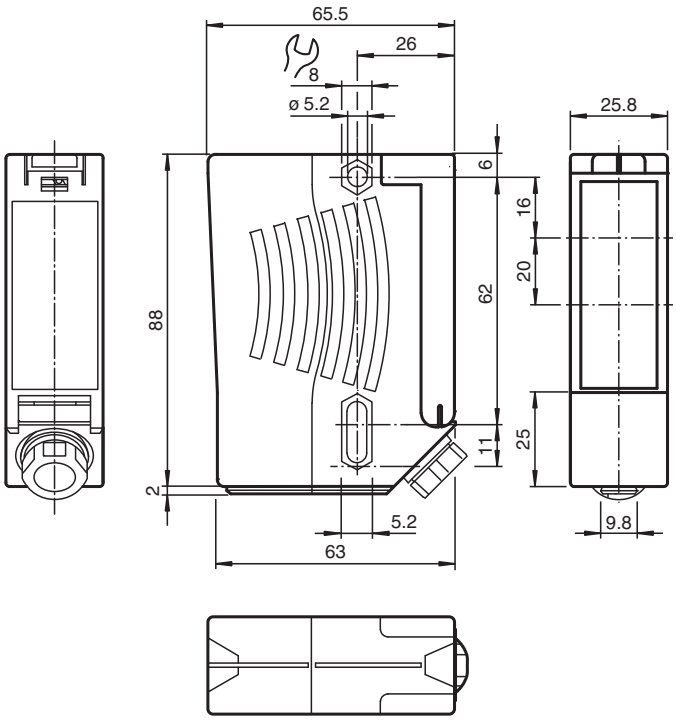

Technical Data

General specifications		
Effective detection range		0 ... 12 m
Reflector distance		0.04 ... 12 m
Threshold detection range		14 m
Reference target		H85-2 reflector
Light source		LED
Light type		modulated visible red light , 640 nm
Diameter of the light spot		approx. 35 mm at a distance of 12 m
Angle of divergence		± 1 °
Ambient light limit		90000 Lux
Functional safety related parameters		
$MTTF_d$		1460 a
Mission Time (T_M)		20 a
Diagnostic Coverage (DC)		0 %
Indicators/operating means		
Function indicator		LED red illuminates: when beam is free flashes: when level falls below function reserve off: when beam is interrupted
Electrical specifications		
Operating voltage	U_B	24 ... 230 V AC/DC
Ripple		10 %
No-load supply current	I_0	≤ 8.5 mA

Release date: 2020-12-10 Date of issue: 2020-12-10 Filename: 114642_eng.pdf

Technical Data

Power consumption	P_0	0.2 W at 24 V DC , 1.8 W at 230 V AC 3 VA
Output		
Switching type		dark on
Signal output		Relay, 1 alternator
Switching voltage		230 V AC
Switching current		max. 2 A
Switching frequency	f	7 Hz
Response time		50 ms
Conformity		
Product standard		EN 60947-5-2
Approvals and certificates		
CE conformity		yes
EAC conformity		TR CU 020/2011 TR CU 004/2011
UL approval		cULus Listed **Caution:** This equipment is considered as open-type equipment. It must be mounted within an enclosure, that is suitably designed for protection against internal fire and personal injury resulting from accessibility to live parts according UL 508.
CCC approval		Certified by China Compulsory Certification (CCC)
Ambient conditions		
Ambient temperature		-20 ... 60 °C (-4 ... 140 °F)
Storage temperature		-30 ... 70 °C (-22 ... 158 °F)
Mechanical specifications		
Degree of protection		IP67
Connection		terminal compartment
Material		
Housing		Plastic ABS, flame resistant
Optical face		Plastic pane
Mass		100.7 g
Note		Safety fuse ≤ 2 A (slow-blow) according to IEC 60127-2 Sheet 1 Recommendation: after a short circuit, check that the device is functioning correctly.

Release date: 2020-12-10 Date of issue: 2020-12-10 Filename: 114642_eng.pdf

Connection Assignment

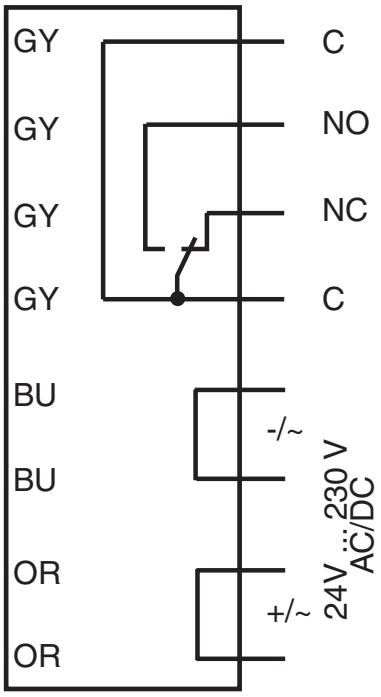

Assembly

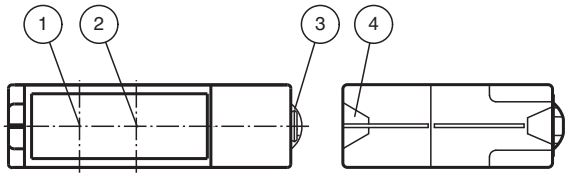

1	Emitter	
2	Receiver	
3	Dovetail mount	
4	Functional display	yellow

Characteristic Curve

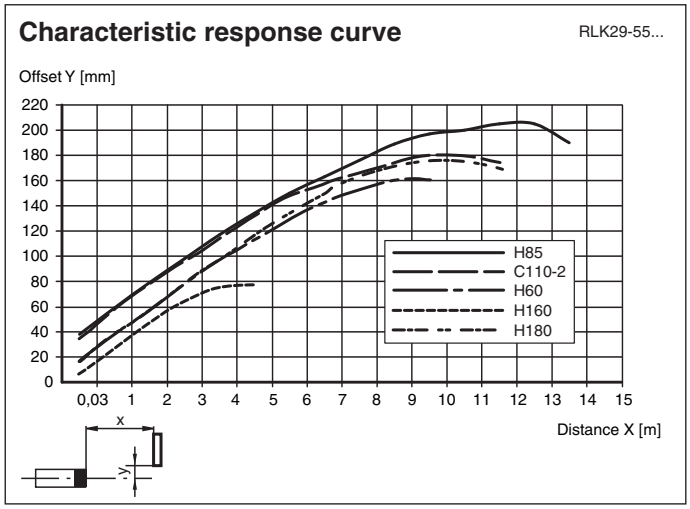

Release date: 2020-12-10 Date of issue: 2020-12-10 Filename: 114642_eng.pdf

Relative received light strength

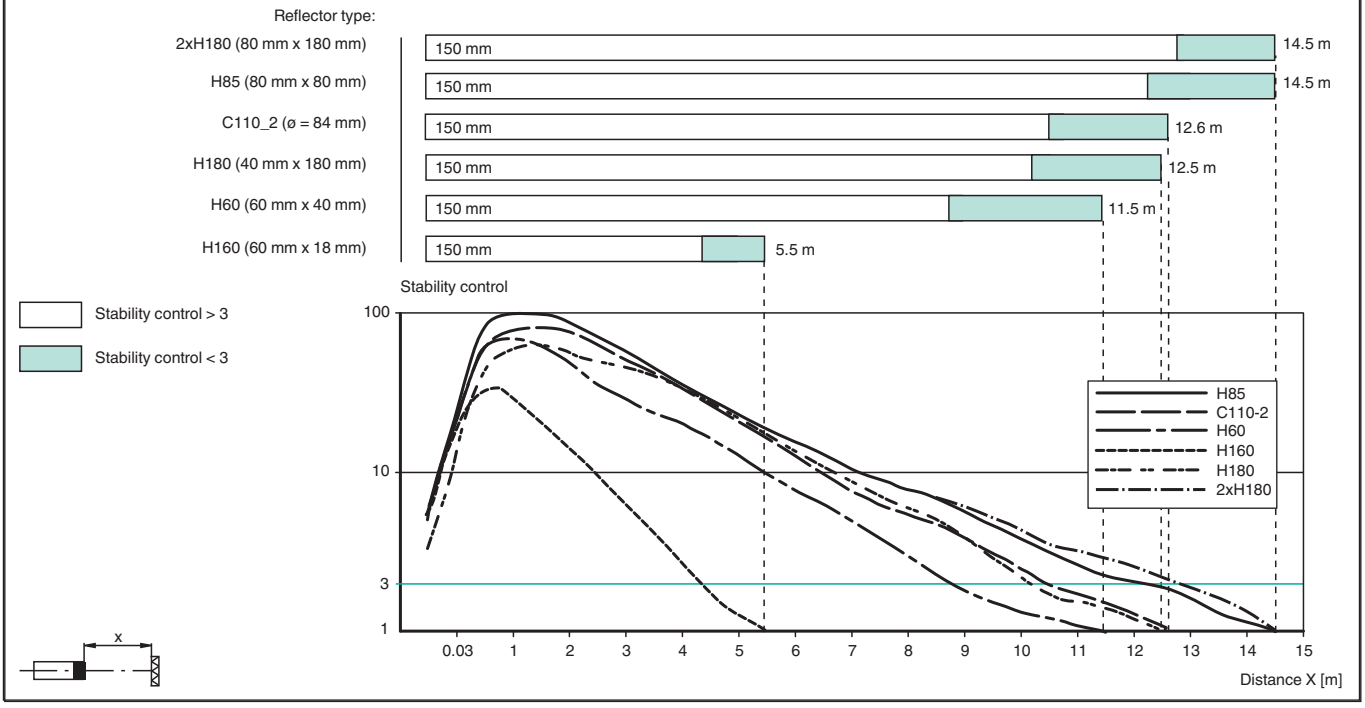

Application



Accessories

	**OMH-RLK29**	Mounting bracket
	**OMH-RLK29-HW**	Mounting bracket for rear wall mounting
	**OMH-RLK29-HW-120**	Mounting bracket for rear wall mounting
	**OMH-21**	Mounting bracket
	**OFR-100/100**	Reflective tape 100 mm x 100 mm

Release date: 2020-12-10 Date of issue: 2020-12-10 Filename: 114642_eng.pdf

Accessories

	**REF-C110-2**	Reflector, round ø 84 mm, central mounting hole
	**REF-H180**	Reflector, rectangular 182 mm x 42 mm, mounting holes
	**REF-H160**	Reflector, rectangular 60 mm x 18 mm, mounting holes
	**REF-H85-2**	Reflector, rectangular 84.5 mm x 84.5 mm, mounting holes
	**REF-H60-2**	Reflector with mounting holes
	**REF-H50**	Reflector, rectangular 51 mm x 61 mm, mounting holes, fixing strap

Release date: 2020-12-10 Date of issue: 2020-12-10 Filename: 114642_eng.pdf

Accessories

Other suitable accessories can be found at www.pepperl-fuchs.com

Application

- Monitoring closing edges of automatic industrial doors and elevators
- Monitoring the swing range of automatic gates
- Detecting and tracking objects in material handling

Release date: 2020-12-10 Date of issue: 2020-12-10 Filename: 114642_eng.pdf