# II5693

## Inductive sensor

IIC2015-ARKG/UP

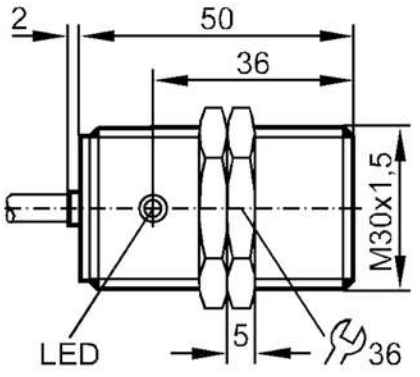


| | | |
|---|---|---|
| **Product characteristics** | | |
| Electrical design | | PNP/NPN |
| Output function | | normally open |
| Sensing range | [mm] | 15 |
| Housing | | threaded type |
| Dimensions | [mm] | M30 x 1.5 |
| **Electrical data** | | |
| Operating voltage | [V] | 10...36 DC |
| Protection class | | II |
| Reverse polarity protection | | yes |
| **Outputs** | | |
| Electrical design | | PNP/NPN |
| Output function | | normally open |
| Max. voltage drop switching output DC | [V] | 4.6 |
| Minimum load current | [mA] | 4 |
| Max. leakage current | [mA] | 0.6 |
| Permanent current rating of switching output DC | [mA] | 150 |
| Switching frequency DC | [Hz] | 200 |
| Short-circuit protection | | yes |
| Type of short-circuit protection | | pulsed |
| Overload protection | | yes |

# II5693

## Inductive sensor

IIC2015-ARKG/UP

| | | | |
|---|---|---|---|
| **Detection zone** | | | |
| Sensing range | [mm] | 15 | |
| Real sensing range Sr | [mm] | 15 ± 10 % | |
| Operating distance | [mm] | 0...12.1 | |
| **Accuracy / deviations** | | | |
| Correction factor | | steel: 1 / stainless steel: 0.7 / brass: 0.4 / aluminium: 0.3 / copper: 0.2 | |
| Hysteresis | [% of Sr] | 3...15 | |
| Switch point drift | [% of Sr] | -10...10 | |
| **Operating conditions** | | | |
| Ambient temperature | [°C] | -25...80 | |
| Protection | | IP 67 | |
| **Tests / approvals** | | | |
| EMC | | EN 60947-5-2 | |
| | | EN 55011 | class B |
| MTTF | [years] | 2642 | |
| **Mechanical data** | | | |
| Weight | [g] | 169 | |
| Housing | | threaded type | |
| Mounting | | non-flush mountable | |
| Dimensions | [mm] | M30 x 1.5 | |
| Thread designation | | M30 x 1.5 | |
| Materials | | PBT | |
| **Displays / operating elements** | | | |
| Display | | switching status | 1 x LED, yellow |
| **Accessories** | | | |
| Items supplied | | lock nuts: 2 | |
| **Remarks** | | | |
| Pack quantity | | 1 pcs. | |

# II5693

## Inductive sensor

**IIC2015-ARKG/UP**

## Electrical connection

Cable: 2 m, PVC; 2 x 0.5 mm²

Connection

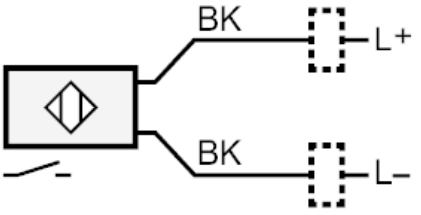


| | |
|---|---|
| | Core colours : |
| BK = | black |