BOS 18M-XI-RS30-S4
BOS01UF

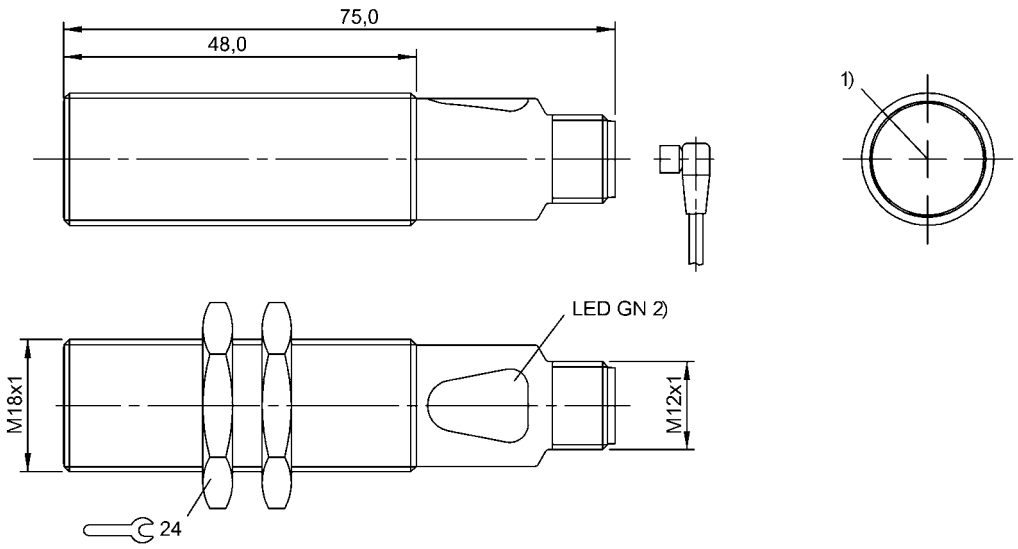

1) Optical axis 2) Operating voltage

LISTED IND. CONT. EQ. 81U2
for use in the secondary of
a class 2 source of supply

Display/Operation

Adjuster	no

Electrical connection

Connection	M12x1-Connector, 4-pole, A-coded
Contact, surface protection	Gold plated
Polarity reversal protected	yes

Electrical data

Baud rate	38.4 kBaud
No-load current Io max. at Ue	40 mA
Operating voltage Ub	18…30 VDC
Pollution degree	3
Protected against miswiring	yes
Rated insulation voltage Ui	75 V DC
Rated operating voltage Ue DC	24 V

Environmental conditions

Ambient temperature	-5…55 °C
Protection class	II
Protection type IEC 60529	IP67

Functional safety

Functional safety	no

General data

Approval/Conformity	cULus CE
Basic standard	IEC 60947-5-2
Function class, smart sensor	Diagnostics Identification
Reference receiver	BOS 18M-PI-RE30-S4
Series	18M
Style	Cylinder Straight optics

Material

Housing material	Brass
Material sensing surface	Glass
Surface protection	nickel plates

Mechanical data

Dimension	Ø 18 x 75 mm
Fastening detail	Nut M18x1
Tightening torque max.	15 Nm 30 Nm

Optical data

LED group per IEC 62471	Risk group 1
Light type	LED Red light
Principle of optical operation	Through-beam sensor (Emitter)
Wave length	626 nm

Output/Interface

Interface	IO-Link 1.1

BOS 18M-XI-RS30-S4
BOS01UF

Interface setting option	Sensor name in application
Process data cycle min.	3 ms
Process data out	Error active/inactive

Range/Distance

Measuring range	0…20 m
Range	0…20 m

Rated operating distance Sn	20 m
Ripple max. (% of Ue)	15 %

Remarks

For additional information, refer to user's guide.
Order accessories separately.

Connector view

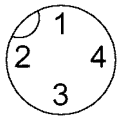

Wiring Diagram

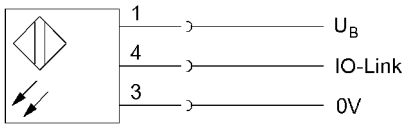

Symbols for Optoelectronic Sensors

