Yealink

SIP-T54W

Prime Business Phone to Deliver Optimum Desktop Productivity

Especially designed for busy executives and professionals, Yealink SIP-T54W is an easy-to-use Prime Business Phone with an adjustable 4.3-inch color LCD screen that you can easily and flexibly find the comfortable viewing angle according to the personal and environmental needs. With the built-in Bluetooth 4.2 and the built-in dual band 2.4G/5G Wi-Fi, the SIP-T54W IP Phone ensures you to keep up with the modern wireless technology and take the first chance in the future wireless age. Its built-in USB 2.0 port allows for USB recording or a direct wired/wireless USB headset or up to three Yealink EXP50 expansion modules connection. Benefitting from these features, the Yealink SIP-T54W is a powerful and expandable office phone that delivers optimum desktop efficient and productivity.

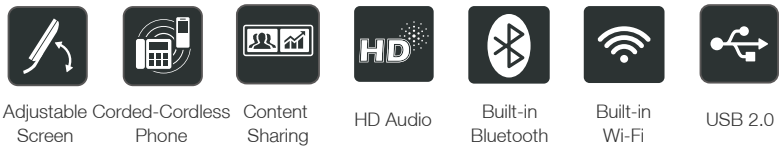

Adjustable Screen | Corded-Cordless Phone | Content Sharing | HD Audio | Built-in Bluetooth | Built-in Wi-Fi | USB 2.0



Key Features and Benefits

User Friendly

Yealink SIP-T54W IP Phone features an adjustable 4.3-inch color LCD screen that you can readily adjust it to the comfortable viewing angle according to yourself. As to the audio quality, the SIP-T54W is coupled with the latest version of Yealink Optimal HD Voice technologies, including Yealink Acoustic Shield technology, that effectively eliminate background distractions and noises, deliver crystal clear voice even in a noisy environment. Meanwhile, complying with the latest Hearing Aid Compatibility (HAC) Regulations, its HAC handset helps the person who is with hearing loss to hear the voice more clearly.

Wireless Transmission

Yealink SIP-T54W IP Phone not only furnish you with the built-in Bluetooth 4.2 for Bluetooth headsets and mobile contacts synchronization, but also the built-in dual band Wi-Fi for Wi-Fi connectivity, allowing you to access the 5G Wi-Fi connectivity handily. Also if you want to expand your horizons for busy environments, or, share one phone system with your small team by adding multiple handsets, just simply turn your IP phone to the corded-cordless phone via DECT technology. Moreover, the IP phone can function with Yealink VC Desktop together to share content from your laptop, making collaboration much easier than before.

High Expandability

A built-in USB 2.0 port allows you to enjoy USB call recording via USB flash drive. Via this USB port, you also can connect wired/wireless USB headset without connecting Yealink EHS36 anymore, and connect up to 3 Yealink expansion modules EXP50 which can be programmed with up to 180 paperless DSS keys.

Efficient Installation and Provisioning

The Yealink SIP-T54W supports efficient provisioning and effortless mass deployment with Yealink's Redirection and Provisioning Service (RPS) and Boot mechanism to help you realize the Zero Touch Provisioning without any complex manual settings. Furthermore, a unified firmware and auto-p template that applies to T53/T53W/T54W/T57W phone models, saves even more time and costs for businesses, as well as simplifies the management and maintenance.

- 4.3" 480 x 272-pixel color display with backlight
- Adjustable LCD screen
- Dual firmware images
- T53/T53W/T54W/T57W firmware unified
- Built-in Bluetooth 4.2
- Built-in dual band 2.4G/5G Wi-Fi (802.11a/b/g/n)
- USB 2.0 port for USB recording, wired/wireless USB headsets and EXP50
- Up to 16 VoIP accounts
- Dual-port Gigabit Ethernet
- PoE support
- HAC Handset
- Paperless label design
- Wall mountable

Yealink

Specifications

Audio Features
- HD voice: HD handset, HD speaker
- Hearing aid compatible (HAC) handset
- Acoustic Shield
- Smart Noise Filtering
- Audio codec: G.722, PCMU (G.711A), PCMA (G.711μ), G.729, G.729A, G.729B, G.729AB, G.726, G.723.1, iLBC
- DTMF: In-band, Out-of-band (RFC 2833) and SIP INFO
- Full-duplex hands-free speakerphone with AEC
- VAD, CNG, AEC, PLC, AJB, AGC

Phone Features
- 16 VoIP accounts
- Call hold, call forward, call waiting, call transfer
- One-touch speed dial, hotline, mute, DND
- Group listening, SMS, emergency call
- Redial, call return, auto answer
- 10-way conferencing
- Direct IP call without SIP proxy
- Ring tone selection/import/delete
- Set date time manually or automatically
- Dial plan, XML Browser, Action URL/URI
- RTCP-XR (RFC3611), VQ-RTCPXR (RFC6035)
- Built-in dual band Wi-Fi:
  - Network standard: IEEE802.11a/b/g/n
  - Transmission rate: Up to 433Mbps (dynamic)
  - Frequency range: 2.4GHz/5.0GHz
- Built-in Bluetooth for:
  - Bluetooth headset,
  - Mobile contacts synchronization
  - Bluetooth call
  - Simultaneous connection of one headset and one mobile phone
- USB port (2.0 compliant) for:
  - Wired/wireless USB headset
  - USB call recording through USB flash drive
  - Color-screen expansion modules EXP50 (up to 3)
  - Wireless Headset Adapter EHS40
- USB/Bluetooth connectivity to Yealink CP900/CP700 speakerphone, USB connectivity to Yealink UH36 headset:
  - Basic functions: Answer / end, call mute
  - Enhanced function: audio optimization, redial, call hold, volume synchronization, multiple calls control
- Content Sharing (via Yealink VCD)
- Enhanced DSS key

Directory
- Local phonebook up to 1000 entries
- Black list
- XML/LDAP remote phonebook
- Smart dialing
- Phonebook search/import/export
- Call history: dialed/received/missed/forwarded

Corded-Cordless Phone (via DECT Dongle DD10K)
- Up to 4 DECT cordless handsets
- Up to 4 concurrent calls
- Support Yealink W52H/W53H/W56H/DD Phone/CP930W
- Slave Handset for Master Deskset

IP-PBX Features
- Busy Lamp Field (BLF)
- Bridged Line Apperance (BLA)
- Anonymous call, anonymous call rejection
- Hot-desking, voice mail
- Flexible seating
- Executive and Assistant
- Call park, call pickup
- Centralized call recording, call recording

Display and Indicator
- 4.3" 480 x 272-pixel color display with backlight
- 16 bit depth color
- LED for call and message waiting indication
- Dual-color (red or green) illuminated LEDs for line status information
- Wallpaper
- Intuitive user interface with icons and soft keys
- Multilingual user interface
- Caller ID with name and number
- Screensaver
- Power saving

Feature keys
- 10 line keys with LED
- 10 line keys can be programmed up to 27 various features (3-page view)
- 7 features keys: message, headset, hold, mute, transfer, redial, hands-free speakerphone
- 4 context-sensitive “soft” keys
- 6 navigation keys
- Volume control keys
- Illuminated mute/headset/hands-free speakerphone key

Interface
- Dual-port Gigabit Ethernet
- Power over Ethernet (IEEE 802.3af), class 3
- 1 x USB port (2.0 compliant)
- 1 x RJ9 (4P4C) handset port
- 1 x RJ9 (4P4C) headset port

Management
- Configuration: browser/phone/auto-provision
- Auto provision via FTP/TFTP/HTTP/HTTPS for mass deploy
- Auto-provision with PnP
- Broadsoft device management
- Zero-sp-touch, TR-069
- Phone lock for personal privacy protection
- Reset to factory, reboot
- Package tracing export, system log

Network and Security
- SIP v1 (RFC2543), v2 (RFC3261)
- Call server redundancy supported
- NAT traversal: STUN mode
- Proxy mode and peer-to-peer SIP link mode
- IP assignment: static/DHCP
- HTTP/HTTPS web server
- Time and date synchronization using SNTP
- UDP/TCP/DNS-SRV(RFC 3263)
- QoS: 802.1p/Q tagging (VLAN), Layer 3 ToS DSCP
- SRTP for voice
- Transport Layer Security (TLS 1.3)
- HTTPS certificate manager
- AES encryption for configuration file (AES256)
- Digest authentication using MD5/MD5-sess
- OpenVPN, IEEE802.1X, L2TP VPN
- IPv6, LLDP/CDP/DHCP VLAN, ICE

> WPA2/WPA3

> Secure boot

> GARP (Generic Attribute Registration Protocol)

Other Physical Features
- Color: Classic Grey
- Wall mountable (optional)
- External Yealink AC adapter (optional): AC 100~240V input and DC 5V/2A output
- USB output currency: 5V ⎓ 500mA
- Power consumption (PSU): 1.7W-4.3W
- Power consumption (PoE): 2.2W-5.5W
- Dimension (W*D*H*T): 233mm*222.6mm*186.1mm*41.7mm
- Operating humidity: 10~95%
- Operating temperature: -10~50°C (+14~122°F)

Package Features
- Package content:
  - Yealink SIP-T54W IP phone
  - Handset with handset cord
  - Ethernet Cable
  - Stand
  - Quick Start Guide
  - Power Adapter (Optional)
- Qty/CTN: 5 PCS
- N.W/CTN: 6.3 kg
- G.W/CTN: 6.8 kg
- Giftbox size: 259 mm*243 mm*103 mm
- Carton Meas: 538 mm*250 mm*265 mm

Compliance

CE FC HAC RoHS REACH ISO 9001

broadsoft 3CX metaswitch

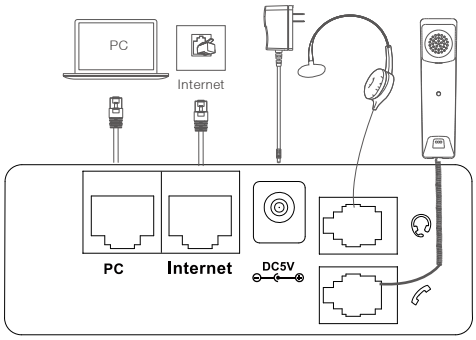

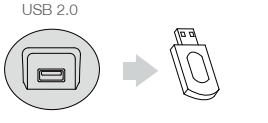

About Yealink

Yealink (Stock Code: 300628) is a global brand that specializes in video conferencing, voice communications and collaboration solutions with best-in-class quality, innovative technology and user-friendly experience. As one of the best providers in more than 140 countries and regions, Yealink ranks No.1 in the global market share of SIP phone shipments (Global IP Desktop Phone Growth Excellence Leadership Award Report, Frost & Sullivan, 2019).

Copyright

Copyright © 2021 YEALINK(XIAMEN) NETWORK TECHNOLOGY CO., LTD.

All rights reserved. No parts of this publication may be reproduced or transmitted in any form or by any means, electronic or mechanical, photocopying, recording, or otherwise, for any purpose, without the express written permission of Yealink(Xiamen) Network Technology CO., LTD.

Technical Support

Visit Yealink WIKI (http://support.yealink.com/) for firmware downloads, product documents, FAQ, and more. For better service, we sincerely recommend you to use Yealink Ticketing system (https://ticket.yealink.com) to submit all your technical issues.

YEALINK(XIAMEN) NETWORK TECHNOLOGY CO., LTD.
Web: www.yealink.com
Addr: No.1 Ling-Xia North Road, High Tech Park,
Huli District, Xiamen, Fujian, P.R.C
Copyright©2023 Yealink Inc. All rights reserved.