M12 Power L-coded male 0° with cable

PUR 5x1.5 gy UL/CSA+drag chain 1,5m

M12
Male straight
5-pole

Plastic housings with good resistance against chemicals and oils. The resistance to aggressive media should be individually tested for your application. Further details on request. Further cable lengths on request.

Link to Product

Illustration

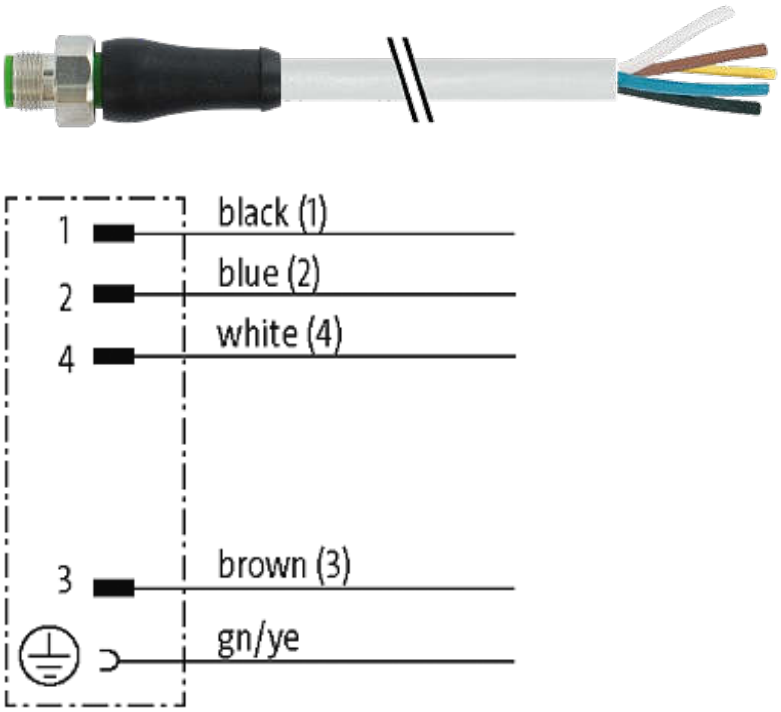

The information in this brochure has been compiled with the utmost care.
Liability for the correctness completeness and topicality of the information is restricted to gross negligence. Version: 02/16

MURR ELEKTRONIK
stay connected

Male

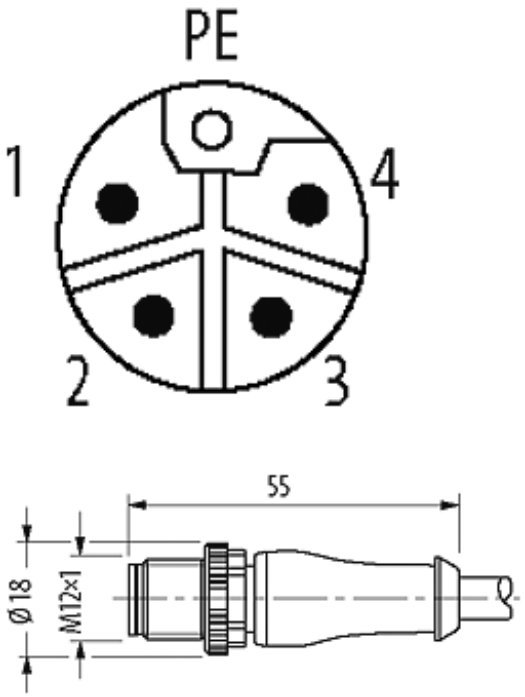

Product may differ from Image

Approvals

Form

Form	P4201

Technical Data

Operating voltage	max. 60 V AC/DC
Operating current per contact	max. 16 A
Coding	M12, L-coded
Locking of ports	Screw thread M12 × 1 mm (recommended torque 0.6 Nm) self-securing
Compression gland	M12 (SW17)
Protection	IP65, IP66K, IP67, IP68 inserted and tightened (EN 60529)
Locking material	Zinc die casting, matte nickel plated
Material	PUR

Cables

Cable number	961
No./diameter of wires	5 × 1.5 mm²
Wire isolation	PP (br, wh, bl, bk num, gnye)

The information in this brochure has been compiled with the utmost care.
Liability for the correctness completeness and topicality of the information is restricted to gross negligence. Version: 02/16

C-track properties	5 Mio.
Torsion	2 Mio. ± 180 °/m
Jacket Color	gray
Shore hardness outer jacket	90 ± 5A
Material (jacket)	PUR (UL/CSA)
Outer Ø	approx. 8.7 mm
Bend radius (fixed)	7.5 × outer Ø
Bend radius (moving)	10 × outer Ø
Temperature range (fixed)	-50...+80 °C
Temperature range (mobile)	-20...+80 °C

Commercial data

country of origin	DE
customs tariff number	85444290
minimum order quantity	1

The information in this brochure has been compiled with the utmost care.
Liability for the correctness completeness and topicality of the information is restricted to gross negligence. Version: 02/16