Mini installation beacon / LED Beacon 801

# LED Perm. Beacon EM 24VAC/DC RD



**Part No.: 801.100.75**

| MECHANICAL DATA | |
|---|---|
| Height | 85 mm |
| Diameter | 57 mm |
| Materials | PC<br>PC/ABS |
| Dome colour | Red |
| Housing colour | Black |
| Protection category | IP65 |
| Connection | Screw terminals |
| cross-sectional area maximum | 1,50mm² / 16AWG |
| Cable entry maximum | d = 9 mm |
| Tension relief | Pull-out protection |
| Type of fixing | Built-in mounting |
| Working temperature minimum | -20°C |
| Working temperature maximum | +50°C |
| Weight with packaging | 79 g |
| Product weight | 60 g |

| ELECTRICAL DATA | |
|---|---|
| Operating voltage | 24V |
| Operating voltage type | AC/DC |
| Operating voltage frequency | 50Hz |
| Operating voltage tolerance | +/- 10% |
| Rated operational voltage | 24 VDC |
| Rated operational current | 45 mA |
| Rated inrush current | 500 mA |
| Protection class | Protection class 2 |
| Pollution degree | 3<br>In the connection area: 2 |

| OPTICAL DATA | |
|---|---|
| Light source | LED |
| Light colour | Red |
| Optical signal image | Permanent |
| Service life optical | 100,000 h maximum |

| APPROVAL DATA | |
|---|---|
| Conforms with CE | Yes |
| WEEE | Yes |
| Conform with ATEX-directive | No |
| Conforms with CCC | No |

! For additional installation and mounting information, refer to the appropriate user guide at www.werma.com. This printed copy is for information only and is subject to alteration.

Mini installation beacon / LED Beacon 801

# LED Perm. Beacon EM 24VAC/DC RD

| | |
|---|---|
| Conforms with UL | cULus |
| UL Type Rating | Type 12 |
| Conforms with FCC | No |
| Conforms with IC | No |
| EAC certificate available | Yes |
| Conforms with AS-I | No |
| ICAO Certification | No |
| Conforms with GL | No |
| Conforms with RoHS CN | No |
| Conforms with VdS | No |

**DRAWING**

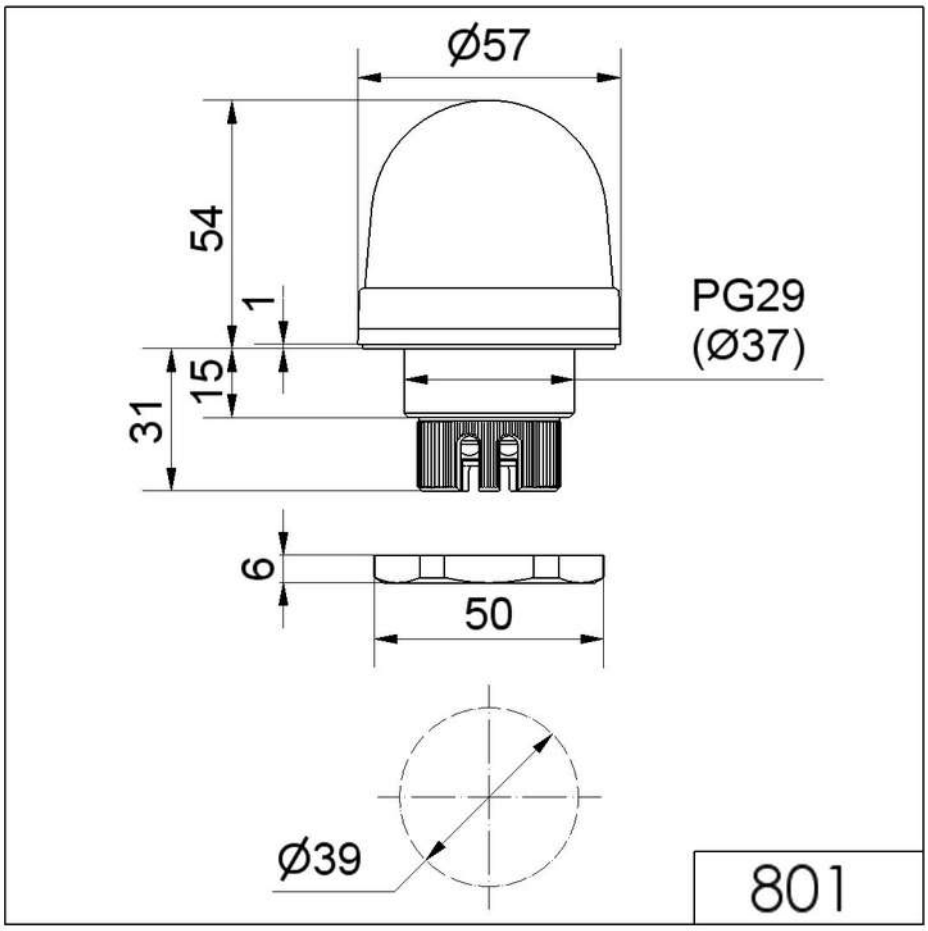


! For additional installation and mounting information, refer to the appropriate user guide at www.werma.com. This printed copy is for information only and is subject to alteration.