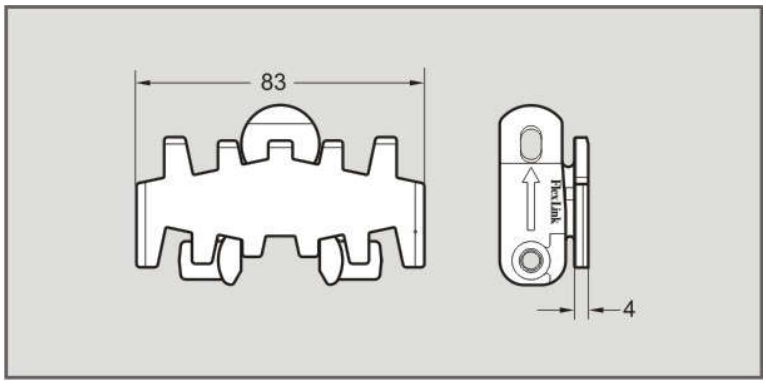

©2022 powered by CADENAS

XMTP 5

Name	Plain chain
Product Group(s)	XM
Configurable	No
Pack Size	1
Class	A
Weight	6.49
Unit	PCE
Length	5000
Spare parts	