LS-551-0500-LIU24PN8X-H1181
Level Sensor – With Analog Output and 4 × Switching Outputs

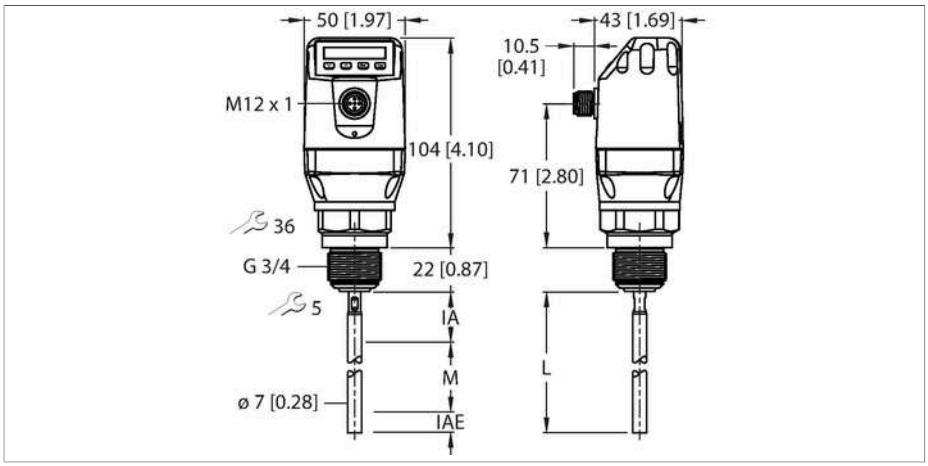

Technical data

Type	LS-551-0500-LIU24PN8X-H1181
ID no.	100001862
Medium temperature	-20…+100 °C
Application area	liquids
Probe length (L)	500 mm
Max. loading of probe	6 Nm
Probe accuracy	± 5 mm
Temperature drift	≤ 0.1
Hysteresis	≥ 2 mm
Reproducibility	≤ 2 mm
Inactive area on process connection (IA)	25 mm
Inactive area at end of probe (IAE)	10 mm
Dielectric constant	≥ 5; ≥ 1.8 mit Koaxialrohr (Zubehör)
Pressure resistance	-1…10 bar
Electrical data	
Operating voltage	12…30 VDC
Current consumption	≤ 100 mA
Short-circuit/reverse polarity protection	yes / yes
Inductive load	< 1 H
Capacitive load	100 nF
Insulation class	III
Outputs	
Output 1	Analog output (current/voltage, automatic switching depending on load)
Output 2	IO-Link/switching output (PNP)
Output 3	Switching output (PNP/NPN)

Features

- Level detection and continuous level measurement
- Easy to service and quick to deploy without calibration
- Very flexible since probes can be shortened
- Easy installation thanks to compact, rotatable housing with display
- Process temperature up to 100 °C
- Process pressure up to 10 bar
- Small blind zones, ideal for small containers
- Coaxial tube available for non-metallic tanks
- IO-Link 1.1
- 12…30 VDC
- 1x analog output 4… 20 mA/0… 10 V (automatic switchover depending on load)
- 1x transistor output (PNP) or IO-Link
- 3x transistor output (PNP/NPN switchable)
- Process connection G3/4" male thread
- Probe length 500 mm

Wiring diagram

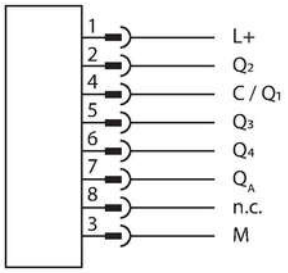

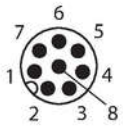

Functional principle

The level sensors of the LS-5 series work according to the principle of the guided microwave. The so-called Time Domain Reflectometry (TDR) is used. This method emits an electromagnetic wave along the probe. When the wave reaches the medium, it is partially reflected due to the dielectric constant compared to air. The electromagnetic wave is picked up again by the sensor and the distance to the liquid can now be determined via the transit time.

LS-551-0500-LIU24PN8X-H1181| 27-04-2021 18-29 | Technical modifications reserved

Technical data

Output 4	Switching output (PNP/NPN)
Output 5	Switching output (PNP/NPN)
Switching output	
Communication protocol	IO-Link
Output function	NO/NC, PNP/NPN, analog output
Analog output	
Current output	4…20 mA
High level signal current	20…20.5 mA
Low level signal current	3.8…4 mA
Load resistance, current output	≤ 0.5 kΩ
Voltage output	0…10 V
High level signal voltage	Uv - 2 V
Low level signal voltage	≤ 2 V
Load resistance voltage output	≥ 0.75 kΩ
Response time typical	< 400 ms
IO-Link	
IO-Link specification	V 1.1
IO-Link port type	Class A
Transmission physics	COM 2 (38.4 kBaud)
Frame type	2.2
Included in the SIDI GSDML	Yes
Mechanical data	
Housing material	Plastic, PBT
Materials (contact with media)	Stainless steel 1.4404 (AISI 316L), PTFE, FKM
Process connection	G 3/4" male thread
Sealing material	Aramid fibers, bound with NBR
Electrical connection	Connectors, M12 × 1
Protection class	IP67
Environmental conditions	
Ambient temperature	-20…+60 °C
Storage temperature	-40…+80 °C
Display functions	
Display	Digital display
MTTF	194 years

Accessories

LSCT-51-0500	100001878
Coaxial tube for LS-5 level sensors (only G3/4") for use in non-metallic containers, tube length 500 mm, process connection G3/4"	

LSCT-34-0500	100001879
Coaxial tube for LS-5 level sensors (only G3/4") for use in non-metallic containers, tube length 500 mm, process connection 3/4" NPT	

LS-551-0500-LIU24PN8X-H1181| 27-04-2021 18-29 | Technical modifications reserved

LSRP-1000	100002197
	Probe rod for screwing into LS-5 level sensors, length 1000 mm

LS-551-0500-LIU24PN8X-H1181| 27-04-2021 18-29 | Technical modifications reserved