# Safety switch

## Series SLK – with separate actuator

| Description **SLK-F-UC-55-R1-A0-L0-0** | Article number **6018119045** |
|---|---|

**Position monitoring of guard locking**
(not wired)

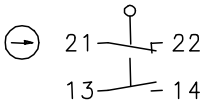


**Termination electromagnet with contact position**
E1, E2 without current

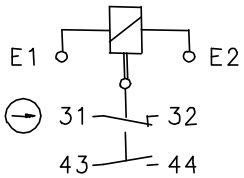


E1, E2 with current

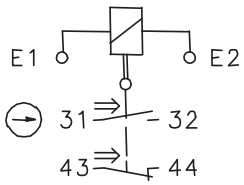


**Operating diagram**

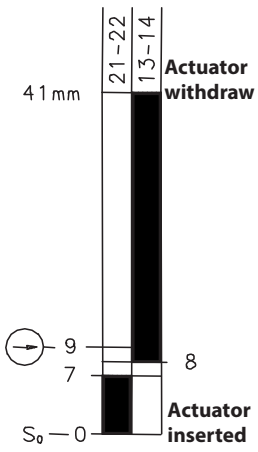





Tolerances:
Actuating force: ± 15 %

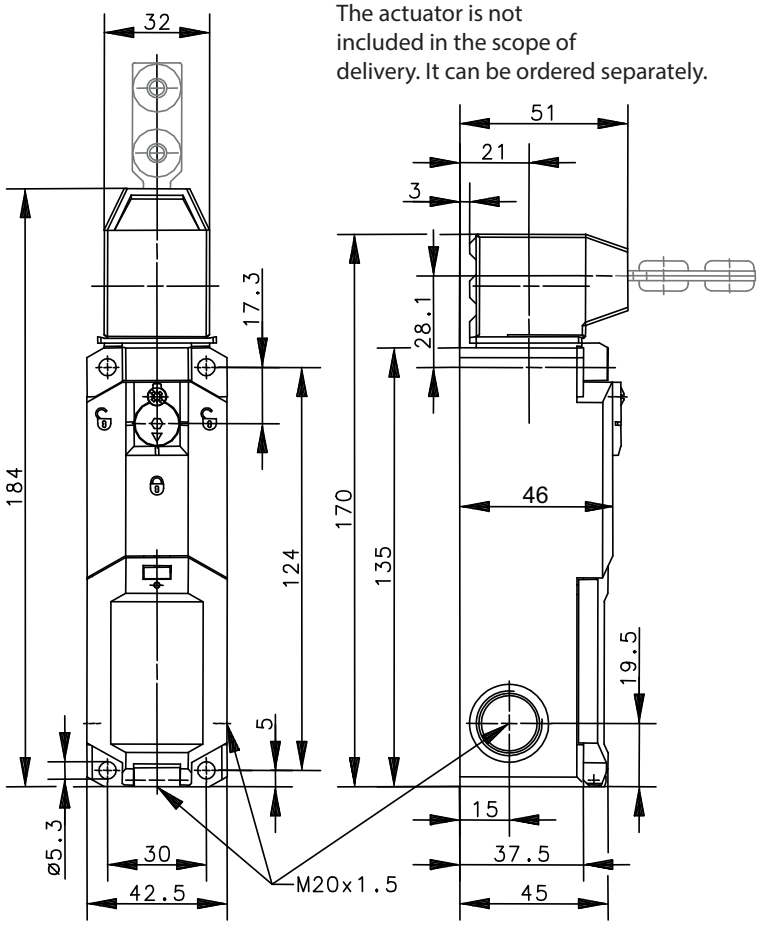


The actuator is not included in the scope of delivery. It can be ordered separately.

| Electrical data | | |
|---|---|---|
| Protection class | | II, totally insulated |
| **Contact elements** | | |
| Rated insulation voltage | $U_i$ | 250 V |
| Rated impulse withstand voltage | $U_{imp}$ | 2,5 kV |
| Conv. thermal current | $I_{the}$ | 5 A |
| Utilization category | | AC-15, $U_e$ / $I_e$ 230 V / 2,5 A |
| Direct opening action | ⊖ | according to IEC/EN 60947-5-1, Annex K |
| Short-circuit protective device | | 4 A gG |
| **Electro magnets** | | |
| Duty cycle | | 100 % ED (at E1; E2) |
| Temperature class | | F (155 °C) |
| Inrush power consumption | | 12 VA (0,2 s) |
| Permanent power consumption | | 4,4 VA |
| Switch operations permanent | | 600 / h |
| Operating voltage | | 24 V AC / DC |

| Mechanical data | | |
|---|---|---|
| Enclosure | | Thermoplastic, glass fibre reinforced (UL 94-V0) |
| Cover | | Thermoplastic, glass fibre reinforced (UL 94-V0) |
| Actuating head | | Thermoplastic, glass fibre reinforced / Zn-GD |
| Actuator | | Separate actuator (Steel / PA) |
| Minimum actuating radius | $R_{min}$ | see separate actuators data sheet |
| Velocity for actuating | $V_{max}$ | 0,5 $^m/_s$ |
| Extraction force | | ≥ 27 N |
| Interlocking principle | | Spring force |
| Unlocking | | a) magnetic force<br>b) auxiliary release from the front |
| Hold on force | $F_{Zh}$ | ≤ 1500 N acc. to GS-ET-19 |
| Ambient air temperature | | -25 ° C ... +70 ° C |
| Contact type | | 2 NC, 2 NO |
| Switching principle | | 4 slow make and break contact elements |
| Mechanical life | | 1 x $10^6$ switching cycles (at max. 600 switch operations / h) |
| Assembly | | 4 x M5 |
| Connection | | Spring-clamp connection |
| Conductor cross-sections | | 0,5 ... 1,5 $mm^2$ flexible |
| Cable entrance | | 3 x M20 x 1,5 |
| Weight | | ≈ 0,34 kg |
| Installation position | | operator definable |
| Protection type | | IP67 acc. to IEC/EN 60529 |

| ID for safety engineering | |
|---|---|
| B10d | 2 x $10^6$ switching cycles |

| Anfahrmöglichkeiten |
|---|
| 4 different actuating directions achievable by rotating the actuating head.<br>Changing between horizontal and vertical actuating direction by setting the actuating head in the requested direction. |

| Standards | |
|---|---|
| | VDE 0660 T100, DIN EN 60947-1, IEC 60947-1 |
| | VDE 0660 T200, DIN EN 60947-5-1, IEC 60947-5-1 |
| | GS-ET-19 |
| | DIN EN ISO 13849-1 |

| EU Conformity | |
|---|---|
| | acc. to directive 2006/42/EC |

| Approvals | |
|---|---|
| | DGUV |
| | $_{c}CSA_{US}$ B300 (same polarity) |
| | CCC |

| Notes |
|---|
| The degree of protection (IP code) specified applies solely to a property closed cover and the use of an equivalent cable gland with adequate cable.<br>The switch may not be used as a mechanical stop.<br>When power is removed from the electromagnet (solenoid) the safety guard will be in locked position.<br>To operate the manual release loosen the screw and turn the hexagonal nut 90°. |