E12320

Connecting cable with socket

ADOGI020MSS0002K02

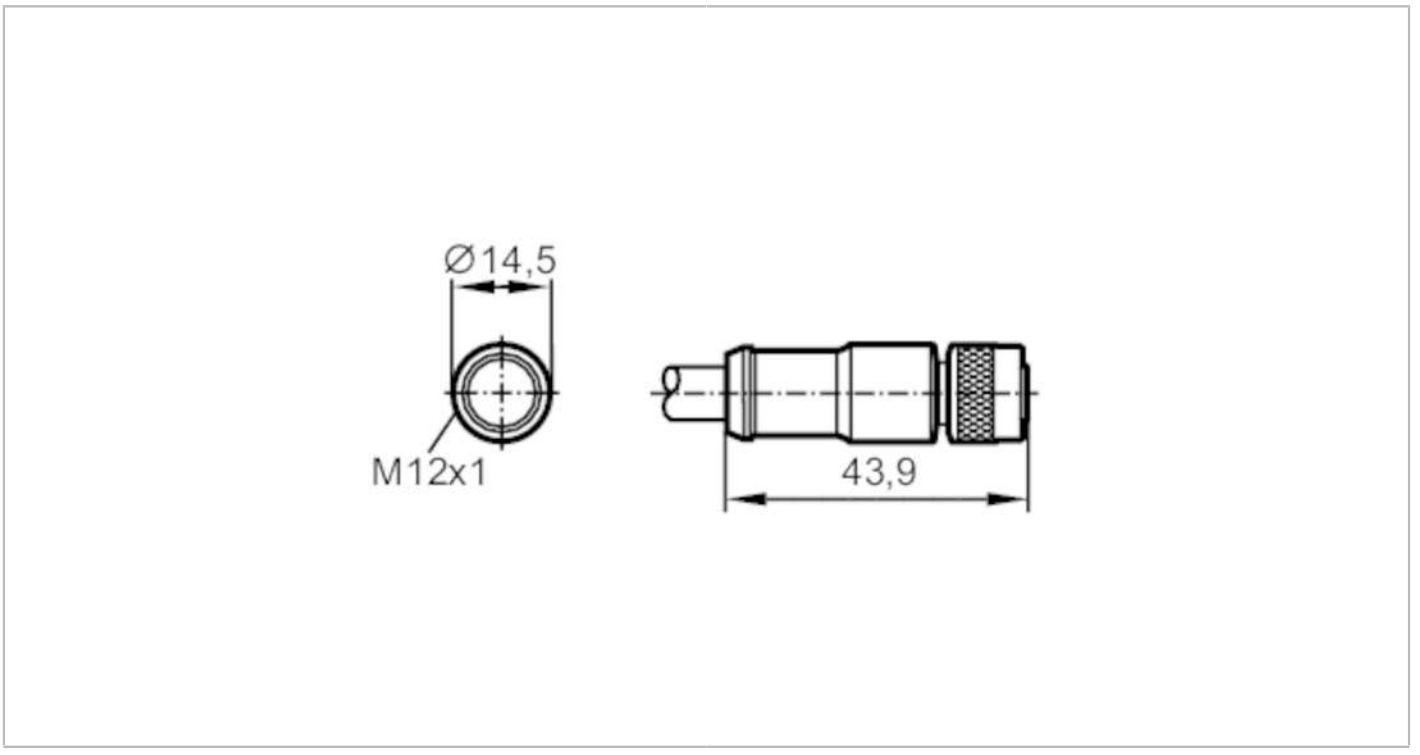

Application		
Special feature		Halogen-free; Gold-plated contacts; Screened cable; Drag chain suitability
Electrical data		
Operating voltage	[V]	< 30 AC / < 36 DC
Max. current load total	[A]	4; (...40 °C)
Operating conditions		
Ambient temperature	[°C]	-40...70
Ambient temperature (moving)	[°C]	-20...50
Protection		IP 67
Mechanical data		
Weight	[g]	145.4
Dimensions	[mm]	14.5 x 14.5 x 43.9
Materials		PUR
Moulded-body material		PUR
Material nut		brass, nickel-plated
Drag chain suitability		yes
Drag chain suitability		bending radius for flexible use: min. 7.5 x cable diameter
		bending radius for fixed installation: min. 10 x cable diameter
		travel speed: max. 5.5 m/s for a horizontal travel length of 5m and max. acceleration of 10 m/s²
		bending cycles: > 5 Mio.
		max. permissible tensile strength: 50 N/mm² static
		20 N/mm² dynamic

E12320

Connecting cable with socket

ADOGI020MSS0002K02

Remarks	
Pack quantity	1 pcs.

Electrical connection

Cable: 2 m, PUR, Halogen-free, lilac, Ø 8 mm, shielded; 2 x 0.25 mm²

Electrical connection - socket

Connector: 1 x M12, straight; coding: B; Moulded body: PUR; Locking: brass, nickel-plated; Contacts: gold-plated; Tightening torque: 0.6 Nm; Shielded connection cable: screen connected

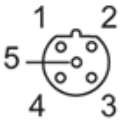

Connection

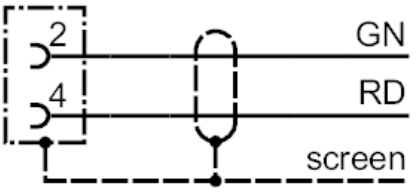

	Core colours :
GN =	green
RD =	red