Product Data Sheet

9274014828
VWC0119AQHCS
4856 Z

ebmpapst
The engineer's choice



GREEN TECH

4856 Z

INDEX

1 General 3
2 Mechanics 3
2.1 General 3
2.2 Connections 4
3 Operating Data 5
3.1 Electrical Operating Data 5
3.2 Electrical Features 6
3.3 Aerodynamics 7
3.4 Sound Data 8
4 Environment 8
4.1 General 8
4.2 Climatic Requirements 9
5 Safety 9
5.1 Electrical Safety 9
5.2 Approval Tests 9
6 Reliability 9
6.1 General 10

1 General

Fan type	Fan
Rotating direction looking at rotor	Clockwise
Airflow direction	Air outlet over struts
Bearing system	Ball bearing
Mounting position - shaft	Any
Balancing grade	2,5

2 Mechanics

2.1 General

Width	119,0 mm	
Height	119,0 mm	
Depth	38,0 mm	
Diameter	0,0 mm	
Mass	0,540 kg	
Housing material	Metal	
Impeller material	Metal	
Max. torque when mounted across both mounting flanges Screw size	Wire outlet corner: 120 Ncm Remaining corners: 350 Ncm ISO 4762 - M4 degreased, without an additional brace and without washer	

2.2 Connections

Electrical connection	Plug	
Lead wire length Tolerance	See drawing	
Tube length Tolerance	See drawing	
Wire size (AWG)		
Insulation diameter		
Plug	See drawing	
Contact	See drawing	

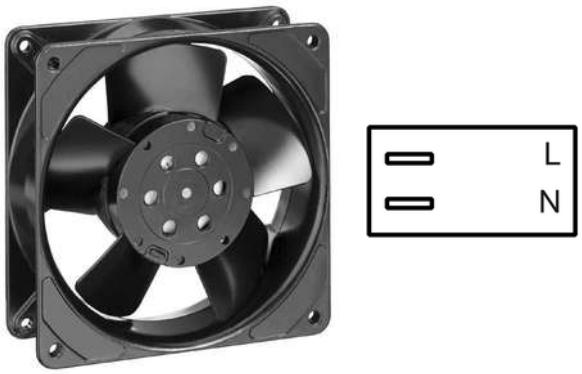

3 Operating Data

3.1 Electrical Operating Data

Measurement conditions:	Normal air density = 1,2 kg/m3; Temperature 23℃ +/- 3℃; Motor axis horizontal;warm-up time before measuring 5 minutes (unless otherwise specified). In the intake and outlet area should not be any solid obstruction within 0,5 m.

∆p = 0: corresp. to free air flow (see chapter aerodynamics)
I: corresp. to RMS line current

Features	Condition	Symbol	Values	
Frequency	∆p = 0	f	50 Hz	60 Hz
Nominal voltage Tolerance	∆p = 0	U_N	230 V + 6 % - 10 %	230 V + 6 % - 10 %
Power consumption Tolerance	∆p = 0	P	13 W +- 10 %	12 W +- 10 %
Speed Tolerance	∆p = 0	n	1.700 1/min +- 10 %	1.800 1/min +- 10 %

3.2 Electrical Features

Locked rotor protection	Impedance
Locked rotor current at	

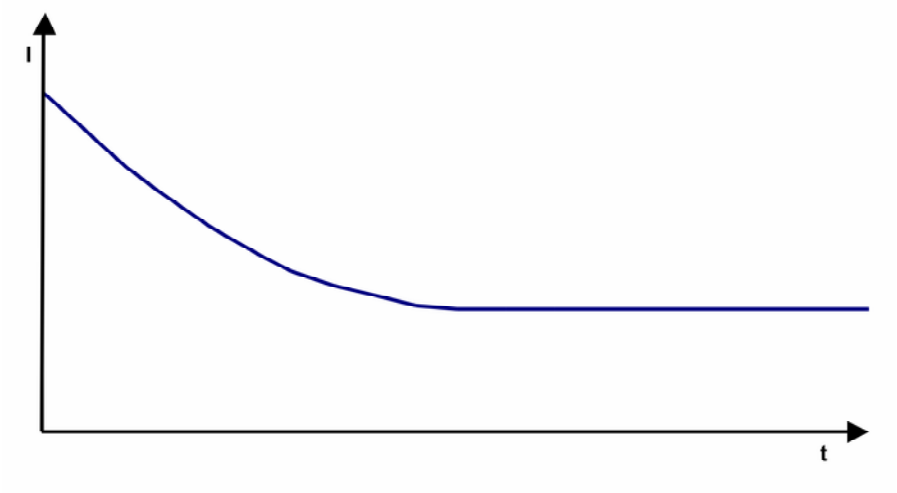

3.3 Aerodynamics

Measurement conditions:

Measured with a double chamber intake rig acc. to DIN EN ISO 5801.
Normal air density = 1,2 kg/m3; Temperature 23℃ +/ - 3℃;
In the intake and outlet area should not be any solid obstruction within 0,5 m. Motor shaft horizontal.
The information is only valid under the specified test conditions and may be changed by the installation conditions. If there are deviations from the standard test conditions, the characteristic values must be checked under the installed conditions.

a.) Operation condition:
1.700 1/min at free air flow Frequency: 50 Hz

Max. free-air flow (Δp = 0 / $\dot{V}$ = max.)	98,0 m3/h
Max. static pressure (Δp = max. / $\dot{V}$ =0)	27 Pa

b.) Operation condition:
1.800 1/min at free air flow Frequency: 60 Hz

Max. free-air flow (Δp = 0 / $\dot{V}$ = max.)	104,0 m3/h
Max. static pressure (Δp = max. / $\dot{V}$ =0)	24 Pa

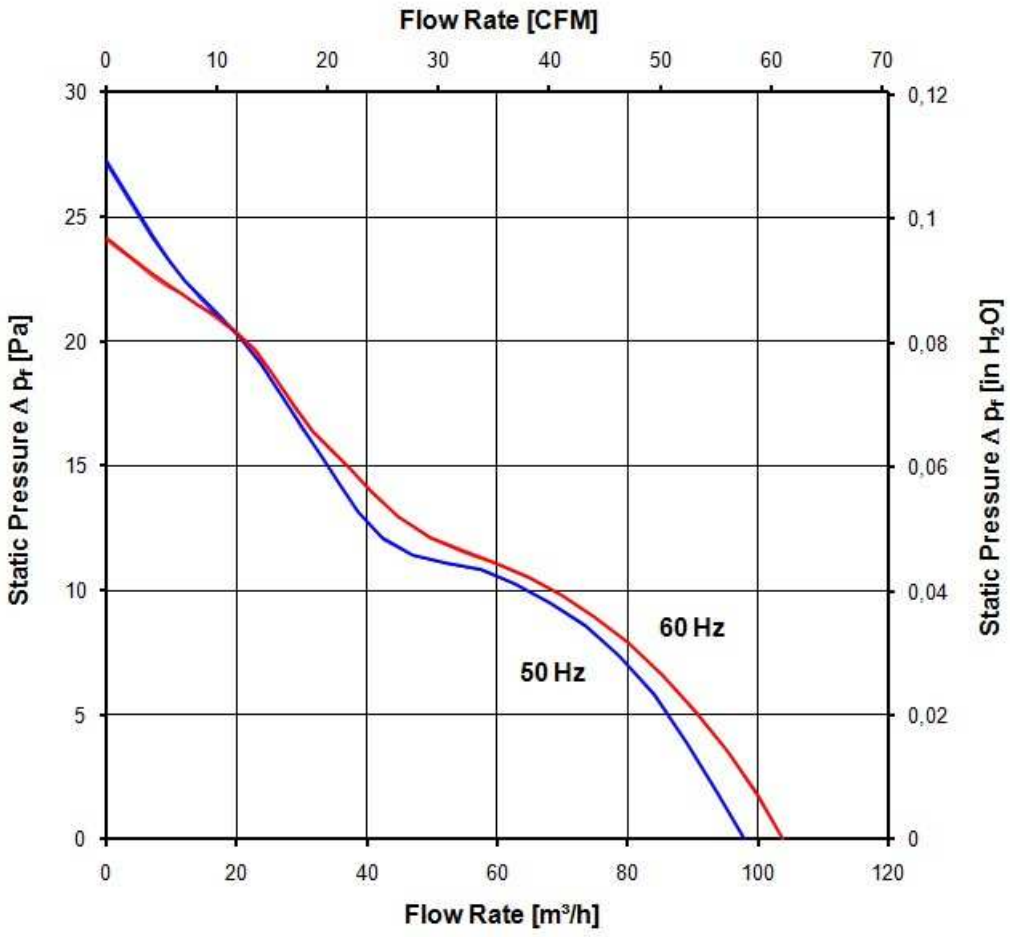

3.4 Sound Data

Measurement conditions:	Sound pressure level: 1 meter distance between microphone and the air intake. Sound power level: Acc. to DIN 45635 part 38 (ISO 10302)Sound power level: Acc. to DIN 45635 part 38 (ISO 10302) Measured in a semianchoic chamber with a background noise level of Lp(A) < 5 dB(A) For further measurement conditions see chapter aerodynamics.

a.) Operation condition:
1.700 1/min at free air flow Frequency: 50 Hz

Optimal operating point	86,0 m3/h @ 5 Pa	
Sound power level at the optimal operating point	3,8 bel(A)	
Sound pressure level at free air flow, measured in rubber bands	25,0 dB(A)	

b.) Operation condition:
1.800 1/min at free air flow Frequency: 60 Hz

Optimal operating point	89,0 m3/h @ 5 Pa	
Sound power level at the optimal operating point	3,9 bel(A)	
Sound pressure level at free air flow, measured in rubber bands	27,0 dB(A)	

4 Environment

4.1 General

Min. permitted ambient temperature TU min.	-40 ℃ / 50 Hz -40 ℃ / 60 Hz	
Max. permitted ambient temperature TU max.	75 ℃ / 50 Hz 75 ℃ / 60 Hz	
Min. permitted storage temperature TL min.	-40 ℃	
Max. permitted storage temperature TL max.	80 ℃	

4.2 Climatic Requirements

Humidity requirements	humid heat, constant; according to DIN EN 60068-2-78, 14 days	
Water exposure	None	
Dust requirements	None	
Salt fog requirements	None	

Permitted application area:
The product is intended for use in sheltered rooms with controlled temperature and controlled humidity. Directly exposure to water must be avoided.

Pollution degree 1 (according DIN EN 60664-1)
There is either no pollution or it occurs only dry, non-conductive pollution. The pollution has no negative impact.

5 Safety

5.1 Electrical Safety

Dielectric strength DIN EN 60950 (VDE 0805) and DIN EN 60335 (VDE 0700) A.) Type test Measuring conditions: After 48h of storage at 95% R.H. and 25℃. No arcing or breakdown is allowed! All connections together to ground. B.) Routine test Measuring conditions: At indoor climate. No arcing or breakdown is allowed! All connections together to ground.	1500 VAC / 1 Min. 1500 VAC / 1 Sec.
Isolation resistance Measuring conditions: After 48h of storage at 95% R.H. and 25℃ measured with U=500 VDC for 1 min.	RI > 50 MOhm
Clearance / creepage distance	2,0 mm / 1,8 mm
Protection class	I

5.2 Approval Tests

CE	EC Declaration of Conformity	Yes
EAC	Eurasian Conformity	Yes
UL	Underwriters Laboratories	Yes / UL507, Electric Fans E38324
VDE	Association for Electrical, Electronic and Information Technologies	Yes / Approval acc. to EN 60950 (VDE 0805) - Information technology equipment
CSA	Canadian Standards Association	Yes / C22.2 No. 113 Fans and Ventilators
CCC	China Compulsory Certification	Yes / GB 12350 Safety Requirements for small Power Motors

The approval tests are observed to:
U approval max.: 230 V / f: 60 Hz @ TU approval max.: 85 ℃

6 Reliability

6.1 General

Life expectancy L10 at TU = 40 ℃	50.000 h / 50 Hz 52.500 h / 60 Hz	
Life expectancy L10 at TU max.	20.000 h / 50 Hz 17.500 h / 60 Hz	

Copying of this document, and giving it to others and the use or communication of the contents thereof, are forbidden without express authority. Offenders are liable to the payment of damages. All rights are reserved in the event of the grant of a patent or the registration of a utility model or design.

Schutzvermerk nach DIN ISO 16016 beachten/
Refer to protection notice DIN ISO 16016!

2:1

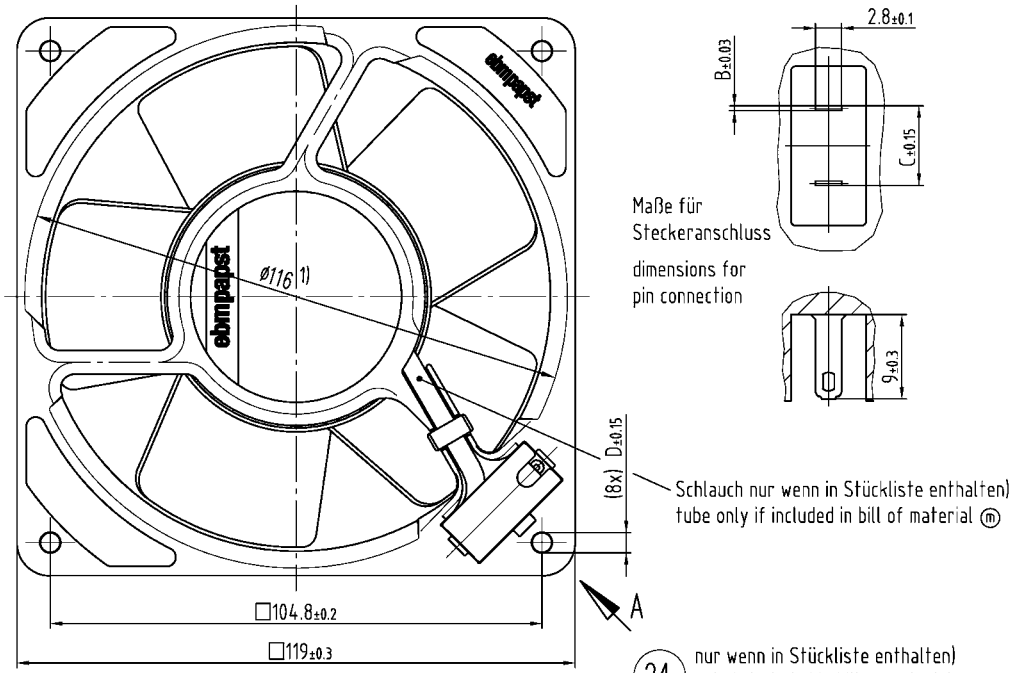

Maße für
Steckeranschluss

dimensions for
pin connection

Schlauch nur wenn in Stückliste enthalten)
tube only if included in bill of material ⓜ

24 nur wenn in Stückliste enthalten)
only if included in bill of material

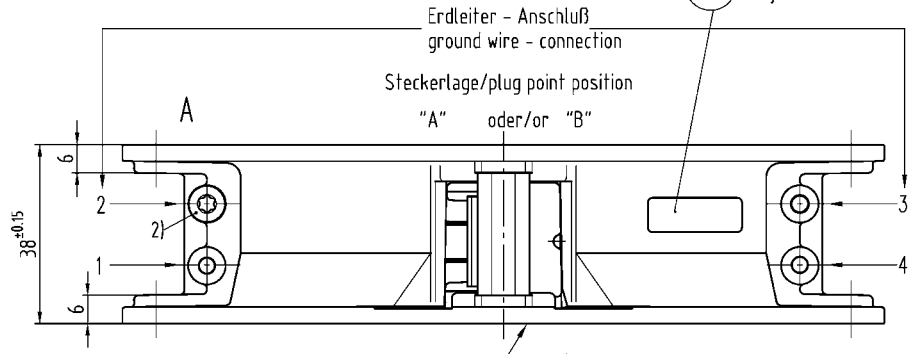

1) Maße für Montagewand
2) Schraube: Duo-Taptite nach DIN 7500,
CM 4x8, Torx

Flanschseite
flangeside

1) dimensions for assembly wall
2) Screw: Duo-Taptite to DIN 7500,
CM 4x8, Torx

Axialspiel bei
- Kugellagerung (K): 0 (mit Federausgleich)
- Gleitlagerung (G): 0.1 - 0.6
- Gleitlagerung (GF): 0 (mit Federausgleich)

axial clearance by
- ball bearing (K): 0 (with spring compensation)
- sleeve bearing (G): 0.1 - 0.6
- sleeve bearing (GF): 0 (with spring compensation)

Erzeugnis-Nr. product number	Typ	Lagersystem bearing system	Befestigungs-bohrung - ø D mounting holes ø D	Steckermaße plug dimensions B/C	Steckerlage plug position	Lage des Erdleiter -Anschlusses position the ground wire - connection
924 4014 800	4656 Z	K	4.3	0.5/8.5	"A"	2
924 4014 801	4650 Z	G	4.3	0.5/8.5	"A"	2
924 4014 802	4606 Z	K	4.3	0.5/8.5	"A"	2
924 4014 803	4600 Z	G	4.3	0.5/8.5	"A"	2
924 4014 828	4856 Z	K	4.3	0.5/8.5	"A"	2
924 4014 829	4850 Z	G	4.3	0.5/8.5	"A"	2
924 4014 832	4806 Z	K	4.3	0.5/8.5	"A"	2
924 4014 833	4800 Z	G	4.3	0.5/8.5	"A"	2
924 4014 836	4536 Z	K	4.3	0.5/8.5	"A"	2
924 4014 837	4530 Z	G	4.3	0.5/8.5	"A"	2
924 4014 840	4586 Z	K	4.3	0.5/8.5	"A"	2
924 4014 841	4580 Z	G	4.3	0.5/8.5	"A"	2
924 4014 842	4606 ZR	K	4.3	0.5/8.5	"A"	2
924 4014 853	4656 Z-853	K	4.3	0.8/8.8	"A"	2
924 4014 854	4650 Z-854	G	4.3	0.8/8.8	"A"	2
924 4014 855	4606 Z-855	K	4.3	0.8/8.8	"A"	2
924 4014 856	4600 Z-856	G	4.3	0.8/8.8	"A"	2
924 4014 857	4856 Z-857	K	4.3	0.8/8.8	"A"	2
924 4014 858	4850 Z-858	G	4.3	0.8/8.8	"A"	2
924 4014 863	4586 Z-863	K	4.3	0.8/8.8	"A"	2
924 4014 864	4580 Z-864	G	4.3	0.8/8.8	"A"	2
924 4014 873	4656 ZR-873	K	4.3	0.5/8.5	"A"	2
924 4014 876	4650 Z-876	G	4.3	0.8/8.8	"A"	2
924 4014 881	4600 Z-881	G	4.3	0.8/8.8	"A"	2
924 4014 884	4856 ZR-884	K	4.3	0.5/8.5	"A"	2
924 4014 886	4586 ZR-886	K	4.3	0.5/8.5	"A"	2
924 4014 024	4586 ZU-024	K	4.3	0.5/8.5	"A"	2
924 4014 025	4656 ZU-025	K	4.3	0.5/8.5	"A"	2

SAP-Status/State	Aend.-Nr./Change-No.	AutoCAD-System-Version	ebmpapst CAD-Umgebung/ CAD-Enviroment	Werkstoff/Material:	Volumen/Volume (mm³):
		Datum/Date	Name/Name		Gewicht/Mass (g):
Tolerierung/Tolerances:		Bearb./ Drawn		Artikel/Title	
Allgemeintoleranzen/Gen. tolerances:		Gepr./ Checked			
		Freig./ Releas.			
ebmpapst		Zchg.-Nr./ Drawing.-No.:		Ers.f.Zchg./ Replaces:	
ebm-papst St. Georgen GmbH & Co. KG		Dokumenttyp/Type of Document	Teildokument (Blatt/Page)	Index/Index: M	Format/Size: / Massstab/scale: —

11/09