THE INFORMATION CONTAINED IN THIS DRAWING IS THE SOLE PROPERTY OF L-COM, INC. ANY REPRODUCTION IN PART OR WHOLE WITHOUT THE WRITTEN PERMISSION OF L-COM, INC. IS PROHIBITED.

REVISIONS			
REV	DESCRIPTION	DATE	CHANGED BY
A	INITIAL RELEASE	12/9/04	T CLARK
B	ECN 3174: REVISED FINISH TO NICKEL PLATE	2/4/08	D.FRISIELLO

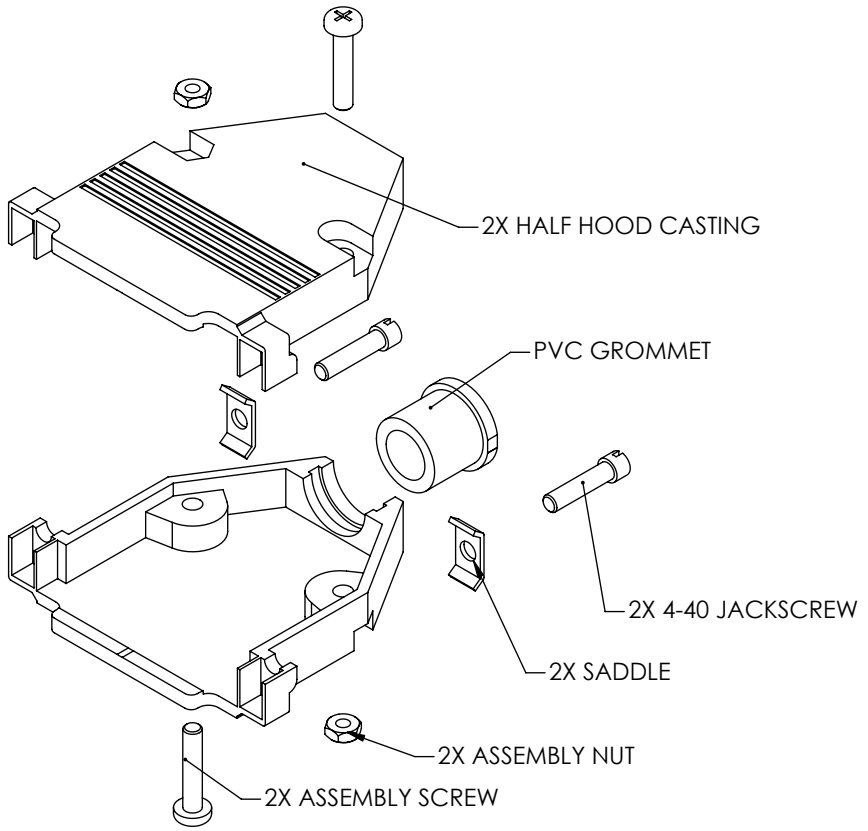

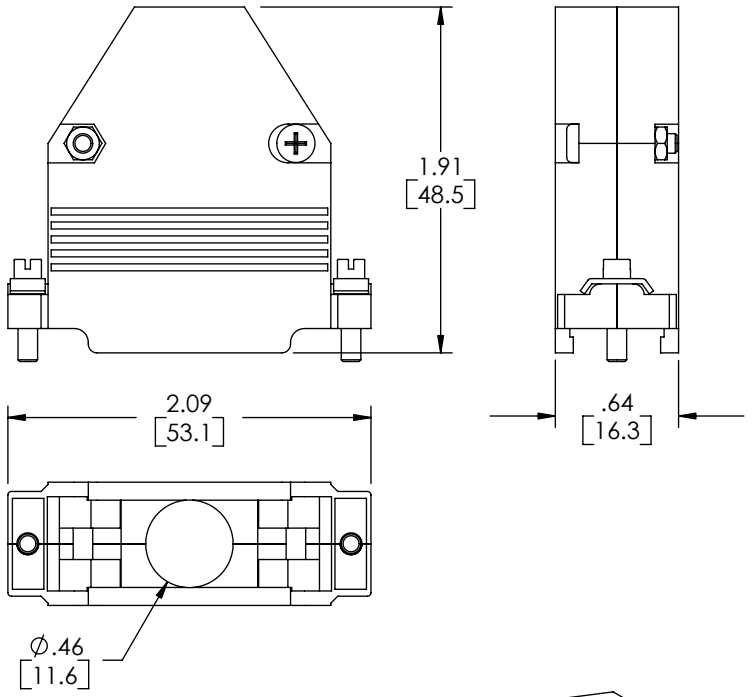

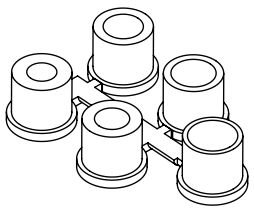

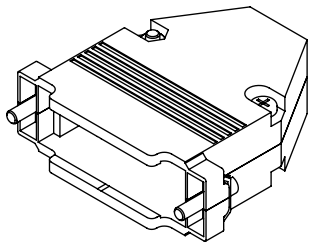

NOTES:

MATERIAL:
HOOD: DIE-CAST ZINC ALLOY
JACKSCREWS: STEEL
ASSEMBLY HARDWARE: STEEL
STRAIN RELIEF GROMMETS: PVC, BLACK

FINISH:
HOOD: NICKEL PLATED, MATTE FINISH ON MAJOR SURFACES
JACKSCREWS: NICKEL PLATED
ASSEMBLY HARDWARE: NICKEL PLATED

MISCELLANEOUS:
INTENDED FOR USE WITH 25-PIN STANDARD AND 44-PIN HIGH DENSITY D-SUBMINIATURE CONNECTORS.
SUPPLIED WITH 5 STRAIN RELIEF GROMMETS FOR CABLE HAVING DIAMETERS RANGING FROM .225 TO .385 INCH.

REPLACES DRAWING 94-060604

UNLESS OTHERWISE SPECIFIED, DIMENSIONS ARE IN INCHES [mm]
TOLERANCES TO BE:
.X ±.1 [2.5] ANGLES ±2°
.XX ±.01 [.25]
.XXX ±.005 [.13]
OVERALL CABLE LENGTH TOL:
≤ 60 [1524] +3 [76.2] / - 0
> 60 [1524] +5% / -0%

PROJ

APPROVALS	DATE
DRAWN BY	
T CLARK	12/6/2004
CHECKED BY	
D PARHAM	12/7/2004
APPROVED BY	
C McCORMICK	12/8/2004

CONFIGURATION DETAILS OF UNDIMENSIONED FEATURES MAY VARY

L-com CONNECTIVITY PRODUCTS
45 BEECHWOOD DRIVE
NORTH ANDOVER, MA
01845

CATEGORY
DATA CABLING

PRODUCT DESCRIPTION
DB25 & HD44 HOOD KIT

SIZE	FSCM NO.	DWG. NO.	REV.
A	43321	SDC25AG	B

SCALE: NONE | CAD FILE: SDC25AG.SLDDRW | SHEET 1 OF 1