Photoelectric Sensors

BOS 21M-PAI-PR30-S4
Order Code: BOS027M

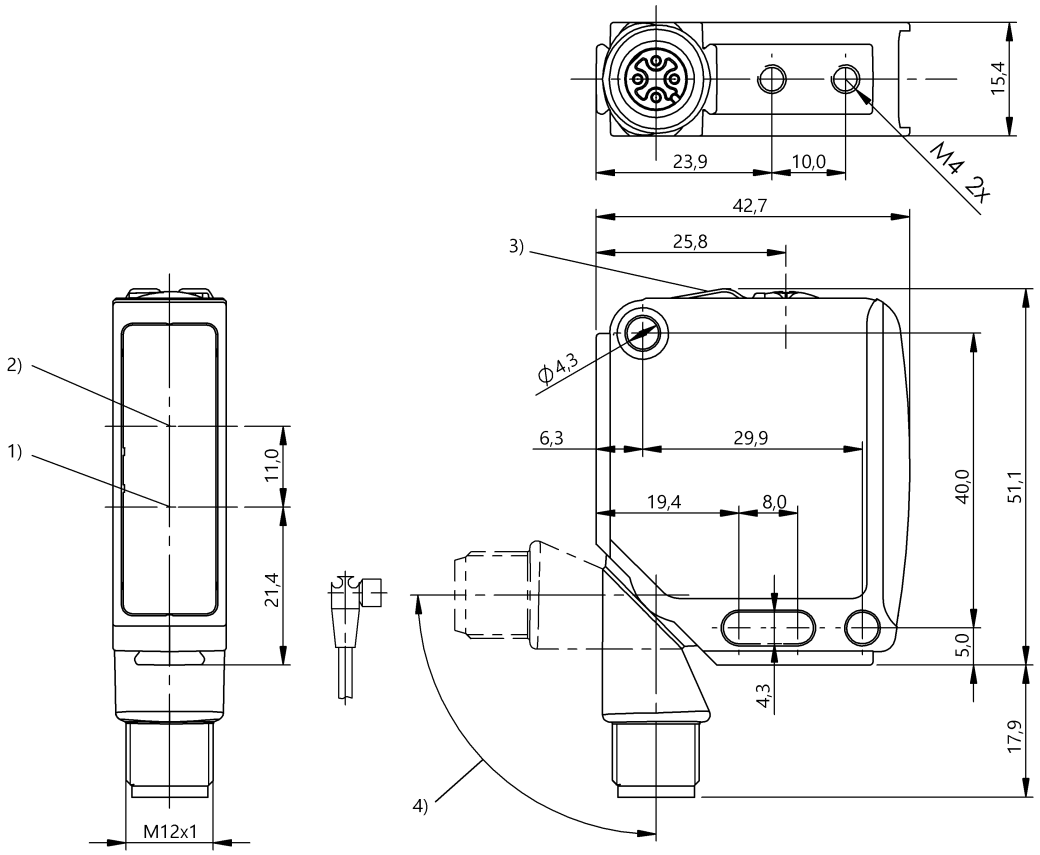

1) Optical axis emitter, 2) Optical axis receiver, 3) Display and control panel, 4) 240° rotatable

Basic features

Approval/Conformity	CE UKCA cULus WEEE Ecolab
Basic standard	IEC 60947-5-2
Operating mode	SIO Mode IO-Link Mode
Principle of operation	Photoelectric sensor
Reference reflector	BOS R-1
Series	21M
Style	Square Connection can be rotated

Display/Operation

Adjuster	Potentiometer 240°
Display	Run - LED green Communication - Green LED, flashing (10:1) LED yellow: Light received Limit range - LED yellow, flashing Error - LED green, flashing
Setting	Sensitivity (Sn)

Electrical connection

Connection	Connector, M12x1-Male, 4-pin
Contact, surface protection	Gold plated
Polarity reversal protected	yes
Protection against device mix-ups	yes
Short-circuit protection	yes

Photoelectric Sensors

BOS 21M-PAI-PR30-S4
Order Code: BOS027M

Electrical data

Load capacitance max. at Ue	0.2 µF
No-load current Io max. at Ue	35 mA
Operating voltage Ub	10...30 VDC
Protection class	II
Rated insulation voltage Ui	75 V DC
Rated operating current Ie	100 mA
Rated operating voltage Ue DC	24 V
Ready delay tv max.	200 ms
Residual current Ir max.	10 µA
Ripple max. (% of Ue)	8 %
Switching frequency	1000 Hz
Turn-off delay toff max.	0.5 ms
Turn-on delay ton max.	0.5 ms
Utilization category	DC -13
Voltage drop Ud max. at Ie	2 V

Environmental conditions

Ambient temperature	-25...60 °C
Ambient temperature UL max.	55 °C
Contamination scale	3
EN 60068-2-27, Shock	Half-sinus, 30 g_n, 11 ms, 3x6
EN 60068-2-6, Vibration	10…55 Hz, amplitude 1 mm, 3x30 min
IP rating	IP67, IP69K

Functional safety

MTTF (40 °C)	889 a

Interface

Baud rate	38.4 kBaud
Interface	IO-Link 1.1
Interface setting option	Display limit range Display temperature Display setting switching range
Process data IN	0 bytes
Process data OUT	1 byte
Process data cycle min.	4 ms
Switching output	PNP normally closed (NC) PNP normally open (NO) Pins 4-2

Material

Housing material	Zinc, Die casting, Powder coated Die-cast zinc
Material sensing surface	PMMA
Surface protection	Powder coated

Mechanical data

Dimension	15.4 x 51.1 x 42.7 mm
Mounting part	Screw M4

Optical features

Ambient light max.	5000 Lux
Beam characteristic	Divergent
Blind zone	100 mm
LED group per IEC 62471	Exempt Group
Light type	LED, red light
Polarizing filter	yes
Principle of optical operation	Retroreflective sensor
Switching function, optical	Light-on dark-on
Wave length	650 nm

Range/Distance

Range	0...10 m
Rated operating distance Sn	8 m Adjustable

Remarks

Order accessories separately.
For additional information, refer to user's guide.
Polarizing filters prevent spurious switching due to reflecting and shiny parts.
Only for applications per NFPA 79 (machines with a supply voltage of maximum 600 V). Use an R/C (CYJV2) cable with suitable properties for attaching the device.
The sensor is functional again after the overload has been eliminated.
Actuation object (target): gray card, 200 x 200, 90 % remission, lateral approach, approach direction vertical to lens axis plane.
For more information about MTTF and B10d see MTTF / B10d Certificate

Indication of the MTTF- / B10d value does not represent a binding composition and/or life expectancy assurance; these are simply experiential values with no warranty implications. These declared values also do not extend the expiration period for defect claims or affect it in any way.

Connector Drawings



Wiring Diagrams

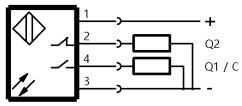

Help Views

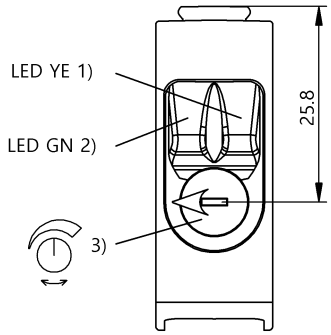

1) Light reception/Limit range
2) Oper. voltage/Error/IO-Link
3) Sn

Opto Symbols

