IGS212

Inductive sensor

IGK3008BBPKG/US-104

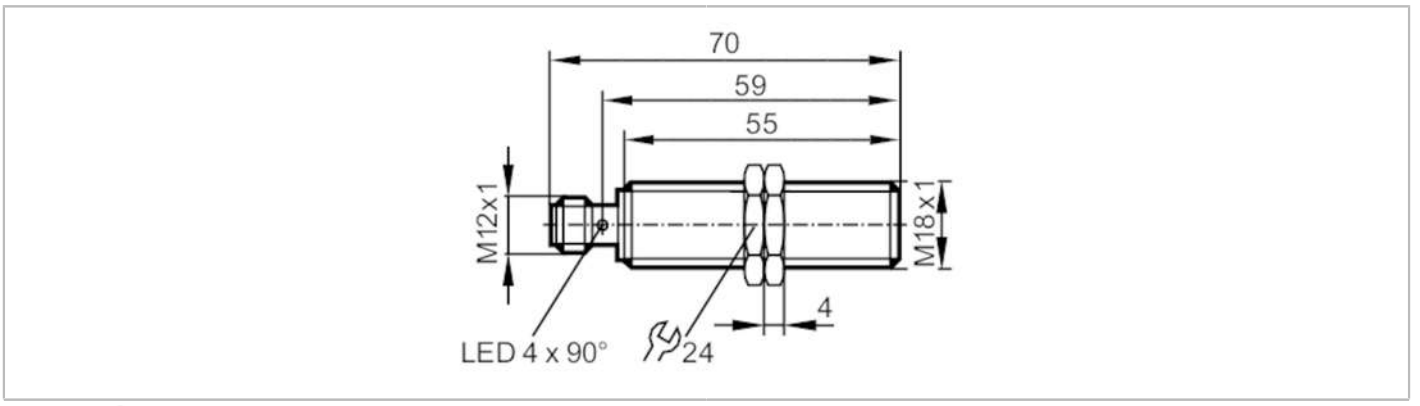

Product characteristics		
Electrical design		PNP
Output function		normally open
Sensing range	[mm]	8
Housing		threaded type
Dimensions	[mm]	M18 x 1 / L = 70
Application		
Special feature		Gold-plated contacts; Increased sensing range
Application		Industrial applications / factory automation
Electrical data		
Operating voltage	[V]	10...30 DC
Current consumption	[mA]	< 10
Protection class		II
Reverse polarity protection		yes
Outputs		
Electrical design		PNP
Output function		normally open
Max. voltage drop switching output DC	[V]	2.5
Permanent current rating of switching output DC	[mA]	100
Switching frequency DC	[Hz]	400
Short-circuit protection		yes
Overload protection		yes
Detection zone		
Sensing range	[mm]	8
Operating distance	[mm]	0...6.48
Increased sensing range		yes
Accuracy / deviations		
Correction factor		steel: 1 / stainless steel: 0.7 / brass: 0.5 / aluminium: 0.4 / copper: 0.3
Hysteresis	[% of Sr]	3...15
Switch point drift	[mm]	-10...10

IGS212

Inductive sensor

IGK3008BBPKG/US-104

Operating conditions			
Ambient temperature	[°C]	-25...70	
Protection		IP 67	
Tests / approvals			
EMC		EN 61000-4-2 ESD	4 kV CD / 8 kV AD
		EN 61000-4-3 HF radiated	10 V/m
		EN 61000-4-4 Burst	2 kV
		EN 61000-4-5 Surge	0,5 kV
		EN 61000-4-6 HF conducted	10 V
		EN 55011	class B
MTTF	[years]	1689	
Embedded software included		yes	
UL approval		Ta	0...40 °C
		Enclosure type	Type 1
		power supply	Hazardous voltage
		UL Approval no.	A003
		File number UL	E174191
Mechanical data			
Weight	[g]	51.7	
Housing		threaded type	
Mounting		flush mountable	
Dimensions	[mm]	M18 x 1 / L = 70	
Thread designation		M18 x 1	
Materials		housing: brass white bronze coated; sensing face: PBT orange; LED window: PEI; lock nuts: white bronze coated	
Displays / operating elements			
Display		switching status	4 x 90° LED, yellow
Accessories			
Items supplied		lock nuts: 2	
Remarks			
Pack quantity		1 pcs.	

Electrical connection - plug

Connector: 1 x M12; coding: A; Contacts: gold-plated

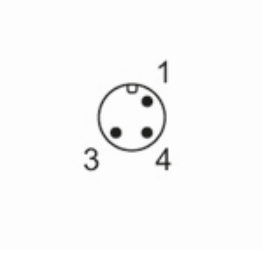

IGS212

Inductive sensor

IGK3008BBPKG/US-104

Connection

