S+S REGELTECHNIK

Outdoor motion sensor with switching output

The motion sensor and presence detector **KIN**ASGARD® **ABWF** detects the presence of persons and motions. It is used to observe and recognise conditions and for motion-dependent control of room functions, e.g. as a motion detector to lower temperatures in unused rooms. The motion sensor is used in corridors, in outdoor areas, in industrial halls, in offices, residential rooms and business facilities. The sensor detects motions over an aperture angle of 110° and a perimeter of 360°. The patented lens system with 20 individual lenses results in only very small dark areas that are only a few centimetres wide even at a distance of 10 m, thereby reliably detecting small movements. The sensor recognizes changes in the infra-red radiation spectrum, so in heat radiation, resulting form the movement of persons or objects. Such movements generate a temporary change of the temperature gradient in the field. Due to the constant presence of body (heat) radiation, this sensor is ideally suitable for detecting persons. The temperature difference between sensor and object must be > 5 K.

ABWF



TECHNICAL DATA

Power supply:	24 V AC (± 20 %); 15...36 V DC
Power consumption:	< 1 W at 24 V DC; < 2 VA at 24 V AC
Sensor:	infra-red motion sensor (see beginning of this chapter)
Detection range:	perimeter 360°, aperture angle 90° / 110°, reach approx. 10 m, circular
Motion detection:	of persons and objects, required temperature difference between subject and surroundings ≥ 5 K
Output:	without / with motion + presence, potential-free changeover contact (24 V), 1 A ohmic load
After-running time:	adjustable from 4 s to 16 min
Ambient temperature:	–10...+50 °C
Electrical connection:	0.14 - 1.5 mm², via terminal screws
Housing:	plastic, UV-resistant, material polyamide, 30 % glass-globe reinforced, with quick-locking screws (slotted / Phillips head combination), colour traffic white (similar to RAL 9016)
Housing dimensions:	72 x 64 x 37.8 mm (Tyr 1)
Cable connection:	**cable gland**, plastic (M 16 x 1.5; with strain relief, exchangeable, inner diameter 10.4 mm) **or** **M12 connector** (optional on request)
Installation:	on-wall
Protection class:	III (according to EN 60 730)
Protection type:	**IP 65** (according to EN 60 529) housing tested, TÜV SÜD, report no. 713139052 (Tyr 1)
Standards:	CE conformity, electromagnetic compatibility according to EN 61 326, EMC directive 2014 / 30 / EU

Connecting diagram **ABWF**

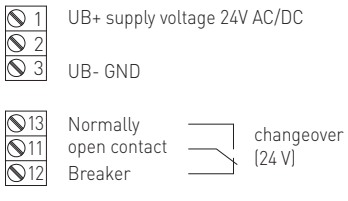

Dimensional drawing **ABWF**

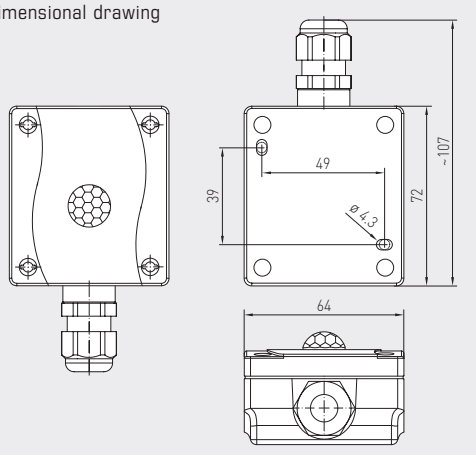



M12 connector
(optional on request)

Schematic diagram **ABWF**

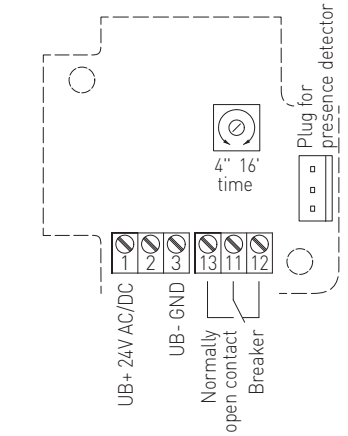

KINASGARD® ABWF Outdoor motion sensor

Type / WG01	Detection Presence + Motion	Output Presence + Motion	Item No.	Price
ABWF				
ABWF-W	Yes / No (relay on / off)	Changeover contact	1401-1110-4000-000	**133,71 €**