UGT523

Ultrasonic sensor

UGB01200FOKG/US

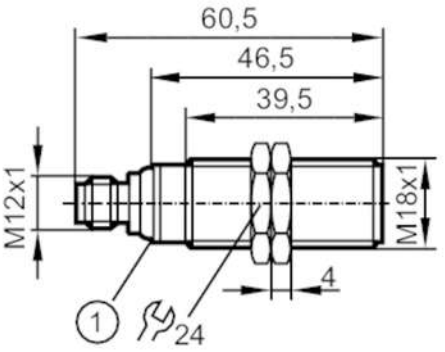

1 LEDs

Product characteristics		
Electrical design		NPN
Output function		normally open / normally closed; (parameterisable)
Sensing range	[mm]	80...1200; (Target: 200 x 200 mm)
Housing		threaded type
Dimensions	[mm]	M18 x 1 / L = 60.5
Electrical data		
Operating voltage	[V]	10...30 DC; ("supply class 2" to cULus)
Current consumption	[mA]	< 35
Protection class		III
Reverse polarity protection		yes
Power-on delay time	[s]	< 0.3
Converter frequency	[kHz]	200
Inputs / outputs		
Number of inputs and outputs		Number of digital outputs: 1
Inputs		
Synchronisation input		no
Multiplex input		no
Outputs		
Total number of outputs		1
Electrical design		NPN
Number of digital outputs		1
Output function		normally open / normally closed; (parameterisable)
Max. voltage drop switching output DC	[V]	2.2
Permanent current rating of switching output DC	[mA]	100
Switching frequency DC	[Hz]	5
Short-circuit protection		yes
Overload protection		yes

UGT523

Ultrasonic sensor

UGB01200FOKG/US

Detection zone			
Sensing range	[mm]	80...1200; (Target: 200 x 200 mm)	
Blind zone	[mm]	80	
Angle of aperture cylindrical	[°]	14; (±2)	
Max. deviation from the 90° angle sensor/object	[°]	± 4	
Accuracy / deviations			
Temperature compensation		yes	
Hysteresis	[%]	< 1	
Switch point drift	[%]	-2.5...2.5	
Linearity error of analogue output	[%]	< 1	
Resolution	[mm]	2	
Notes on the accuracy / deviation		The indicated values are reached after a warm-up time of min. 20 minutes	
Operating conditions			
Ambient temperature	[°C]	-20...70	
Storage temperature	[°C]	-30...80	
Protection		IP 67	
Tests / approvals			
EMC		EN 61000-4-2 ESD	4 kV CD / 8 kV AD
		EN 61000-4-3 HF radiated	3 V/m
		EN 61000-4-4 Burst	2 kV
		EN 61000-4-6 HF conducted	3 V
		EN 55011	Class A
Vibration resistance		EN 60068-2-6 Fc	(10-55) Hz 1 mm amplitude, oscillation period 5 min., 30 min. per axis at resonance or 55 Hz
Shock resistance		EN 60068-2-27 Ea	yes
MTTF	[years]	210	
UL approval		Ta	-20...70 °C
		power supply	Class 2
		File number UL	E174191
Mechanical data			
Weight	[g]	79	
Housing		threaded type	
Dimensions	[mm]	M18 x 1 / L = 60.5	
Thread designation		M18 x 1	
Materials		stainless steel (316L/1.4404); PA; epoxy glass ceramics	
Tightening torque	[Nm]	50	
Displays / operating elements			
Display		switching status	1 x LED, yellow
		echo	1 x LED, green
Accessories			
Items supplied		lock nuts: 2, stainless steel	

UGT523

Ultrasonic sensor

UGB01200FOKG/US

Remarks	
Remarks	operating voltage "supply class 2" according to cULus
Pack quantity	1 pcs.

Electrical connection

Connector: 1 x M12; coding: A



Connection

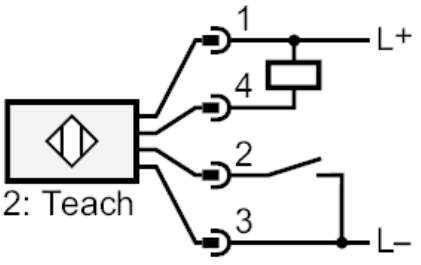

2: Teach

UGT523

Ultrasonic sensor

UGB01200FOKG/US

Diagrams and graphs

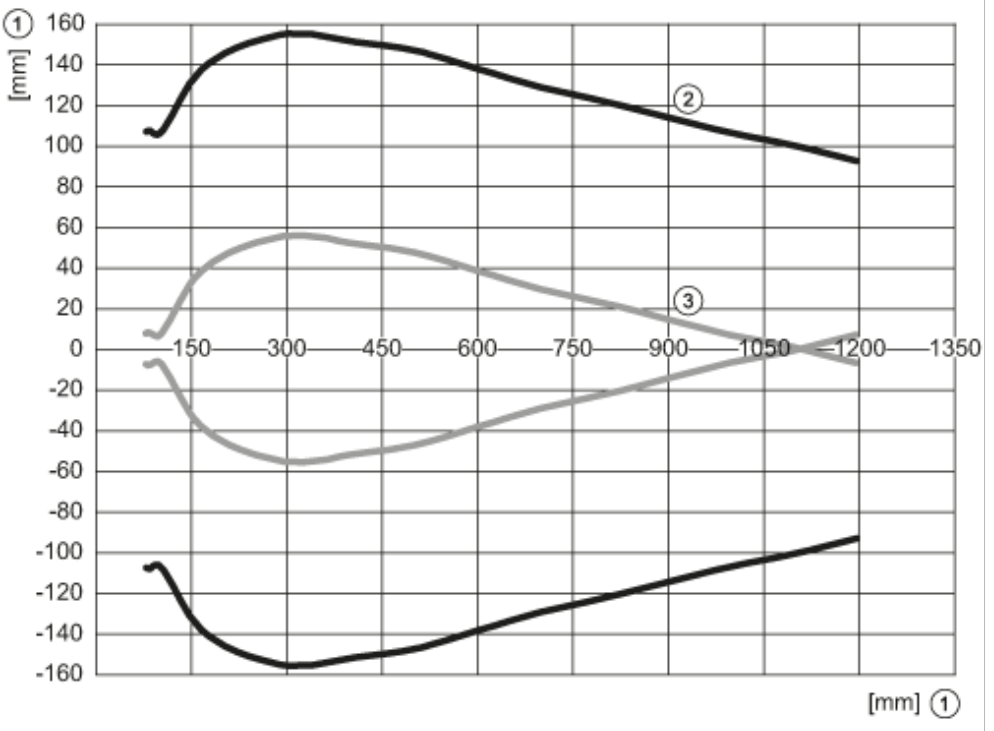

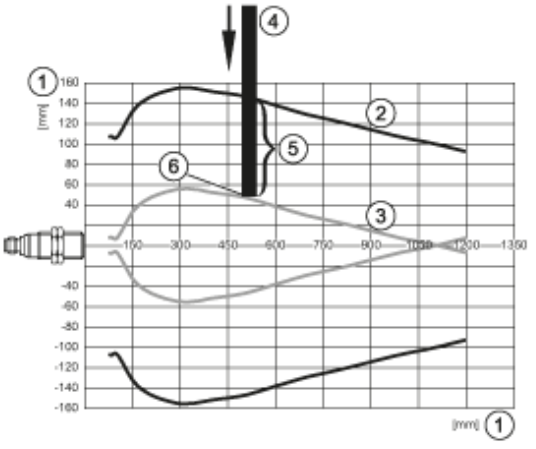

1: distance

2: Detection zone

3: switch-on/switch-off graph

4: Target 200 x 200 mm

5: 50% of the target in the detection zone

6: switch point