Inductive sensor uprox®

Bi20U-CA40-AP6X2-H1141

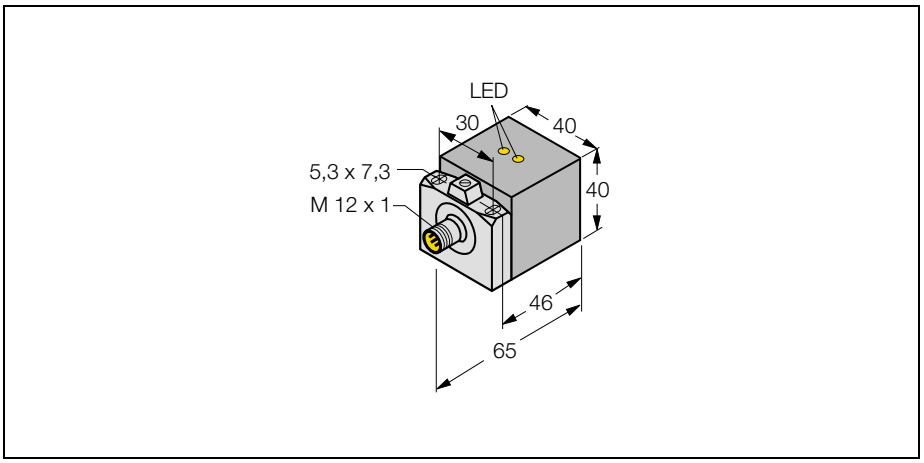

- **Rectangular, height 40mm**
- **Turnable sensing head (5 positions)**
- **Plastic, duroplast**
- **Factor 1 for all metals**
- **Magnetic field immune**
- **Increased temperature range**
- **High switching frequency**

Type	Bi20U-CA40-AP6X2-H1141
Ident-No.	1627200

Rated operating distance Sn	20,0 mm
Mounting mode	flush
Hysteresis H	3...15 %
Max. relative temperature drift	≤ 15 % v.E
Min. repeat accuracy	≤ 2 % v.E
Operation temperature	-30...85 °C

Rated operational voltage (DC) U_e	10...30 VDC
Max. ripple	≤ 10 % U_{ss}
Rated operational current (DC) I_e	200 mA
No-load current I_0	≤ 15,0 mA
Max. OFF-state current	≤ 0,1 mA
Max. switching frequency	≤ 0,25 kHz
Rated insulation voltage	0,5 kV
Output function	normally open, PNP
Short-circuit protection	yes, cyclic
Max. voltage drop at I_e	≤ 1,8 V
Wire brakage and reverse polarity protection	yes, complete
Degree of protection / protection class	IP 67; 2

Housing style	rectangular; CA40
Dimensions	48,0 x 40,0 x 40,0 mm
Housing material	metal; GD-AlSi 12
Active face	plastic; Duroplast
Wiring	connector; M12x1 eurocon
Vibration resistance	55 Hz (1 mm)
Shock resistance	30 x g (11 ms)

Supply voltage indication	LED; green
Switching status indication	LED; yellow

3-wire DC, 10-30VDC
Normally open, PNP-output
Connector, M12x1 eurocon

Wiring diagram

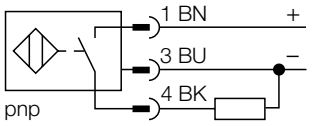

Function principles

Inductive sensors serve for wear-free and non contact detection of metal objects. Uprox Factor 1-sensors have considerable advantages because of their patented ferrite-less 3-coil system. They detect all metals with the same operating distance, are magnetic field immune and have high operating distances.

Hans Turck GmbH & Co. KG Postfach • D–45466 Mülheim an der Ruhr • Telefon 02 08/49 52-0 • Telefax 02 08/49 52-264