IG6062

Inductive sensor

IGA2005-FRKG/US-100-IRF

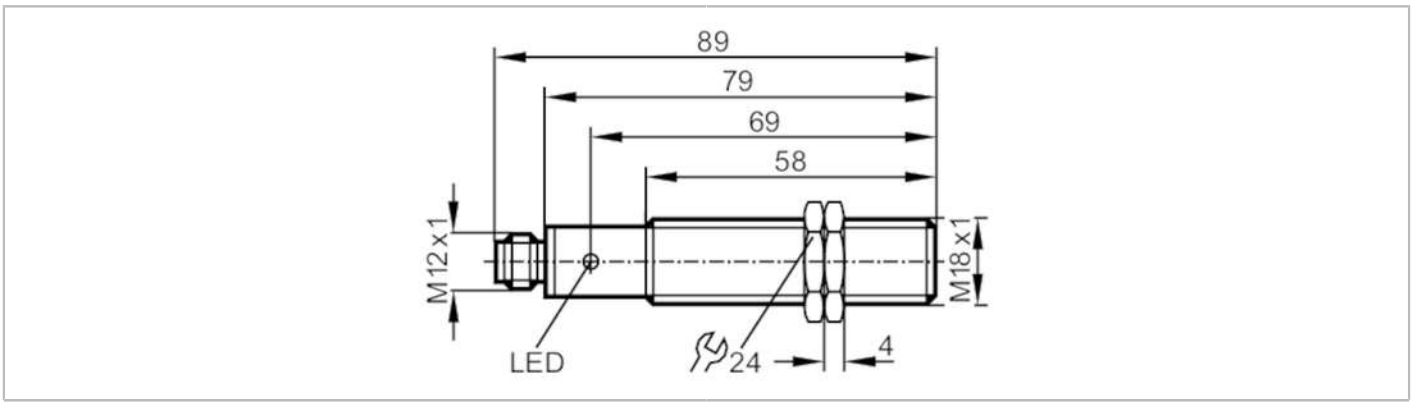

Product characteristics		
Electrical design		PNP/NPN
Output function		normally open / normally closed; (selectable)
Sensing range	[mm]	5
Housing		threaded type
Dimensions	[mm]	M18 x 1 / L = 89
Electrical data		
Operating voltage	[V]	10...36 DC
Protection class		III
Reverse polarity protection		yes
Outputs		
Electrical design		PNP/NPN
Output function		normally open / normally closed; (selectable)
Max. voltage drop switching output DC	[V]	5.5
Minimum load current	[mA]	4
Max. leakage current	[mA]	0.8
Permanent current rating of switching output DC	[mA]	250
Switching frequency DC	[Hz]	100
Short-circuit protection		yes
Type of short-circuit protection		pulsed
Overload protection		yes
Detection zone		
Sensing range	[mm]	5
Real sensing range Sr	[mm]	5 ± 10 %
Operating distance	[mm]	0...4.05
Accuracy / deviations		
Correction factor		steel: 1 / stainless steel: 0.7 / brass: 0.4 / aluminium: 0.4 / copper: 0.3
Hysteresis	[% of Sr]	3...15
Switch point drift	[% of Sr]	-10...10

IG6062

Inductive sensor

IGA2005-FRKG/US-100-IRF

Operating conditions			
Ambient temperature	[°C]	-25...80	
Protection		IP 67	
Increased immunity		yes	
Tests / approvals			
EMC		EN 60947-5-2	
		EN 55011	class B
		VG95373	
		VDE0160	
MTTF	[years]	1483	
Mechanical data			
Weight	[g]	74.6	
Housing		threaded type	
Mounting		flush mountable	
Dimensions	[mm]	M18 x 1 / L = 89	
Thread designation		M18 x 1	
Materials		brass white bronze coated; PC	
Displays / operating elements			
Display		switching status	1 x LED, yellow
Accessories			
Items supplied		lock nuts: 2	
Remarks			
Pack quantity		1 pcs.	
Electrical connection - plug			

Connector: 1 x M12; coding: A



