6255 ~ 'Mistral' Industrial Foot Air Valve



Benefits

- The Mistral heavy industrial foot air valve offers high performance and style
- Available in a choice of colour combinations and valve options including valve port threads
- Special colours available for volume OEM customers
- Robust construction from die-cast aluminium
- The guard is large enough to allow the operator to wear industrial protective shoes
- Competitively priced for OEM users
- Mechanical performance 10^6+ operations

Guard Option

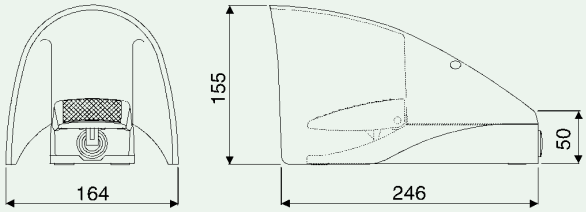

Cover Option

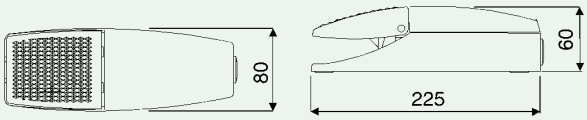

6255 - [ ] A A A - [ ] A Z 0

1. Model Number

2. Cover and Guard Colours

A	Cover - Yellow	B	Guard - Yellow
C	Cover - White	D	Guard - White
E	Cover - Blue	F	Guard - Blue
G	Cover - Orange	H	Guard - Orange
M	Cover - Red	N	Guard - Red

3. Base Colour
A Black

4. Base Configuration
A Entrance ports on each side of base

5. Tread Colour
A Black

6. Valve Action
A Momentary 5/2 Valve 1/8" BSP ISO R228 Standard
B Momentary 5/2 Valve 1/8" NPT
C Momentary 3/2 Valve 1/8" BSP ISO R228 Standard
D Momentary 3/2 Valve 1/8" NPT

Note: Options C and D are supplied with one blanking plug

7. Pneumatic Rating
A Maximum Operating Pressure 10 Bar
Temperature -20˚C to +80˚C.
Flow Rate at 6 Bar 19dm^3 / Sec 40 SCFM

As a consequence of our policy of continual improvement, we reserve the right to change without notice any detail in this publication. Please see our Conditions of Sale.

6255 ~ 'Mistral' Industrial Foot Air Valve

Technical Data	
Maximum Operating Pressure	10 bar (145 PSI / 1000kPa)
Temperature Range	-20˚C to + 80˚C (-40˚F to +176˚F)
Air Condition	Filtered to 40 microns lubricated or dry
Flow Rate at 6 Bar (87 PSI / 600kPa)	19dm³ / sec (40 SCFM)
Ports	ISO R228 (1/8" BSP) standard or NPT
Weights	Cover/Unguarded 800grms / Guarded 1.5kg

Connection Information

Valve connected as a 3/2 Normally Closed valve

- The air supply should be connected to Port 1.
- Port 2 is redundant and should be plugged with the plug fitting supplied.
- The outlet is connected to Port 4.
- Ports 3 and 5 are exhaust ports and should be left open to atmosphere or fitted with silencers. See note below.

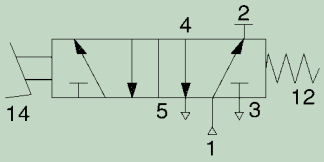

Valve connected as 3/2 Normally Open valve

- The air supply should be connected to Port 1.
- Port 4 is redundant and should be plugged with the plug fitting supplied.
- The outlet is connected to Port 2.
- Ports 3 and 5 are exhaust ports and should be left open to atmosphere or fitted with silencers. See note below.

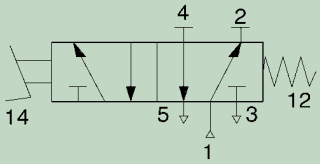

Valve connected as 5/2 valve

- The air supply should be connected to Port 1.
- Ports 2 and 4 are outlet or cylinder ports.
- Ports 3 and 5 are exhaust ports and should be left open to atmosphere or fitted with silencers. See note below.

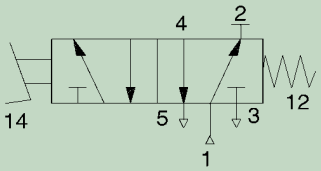

Note: We recommend that the exhaust ports of the valve are fitted with silencers. These will reduce the noise of the exhausting air and prevent dirt entering the valve.

A kit of 6mm fittings including elbows and silencers is available from herga, please quote part number 6050-5500-0029.

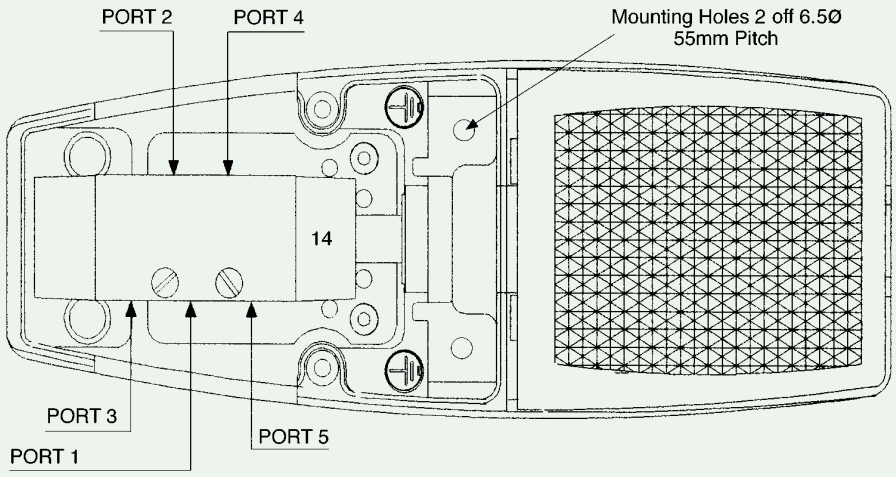

Shown at approximately ½ Scale

As a consequence of our policy of continual improvement, we reserve the right to change without notice any detail in this publication. Please see our Conditions of Sale.