BPT 13 Balanced Pressure Thermostatic Steam Trap

Description
BPT 13 maintainable balanced pressure steam trap is available as follows:
BPT 13 A Angle connections
BPT 13 S Straight connections
BPT 13 UA Angled connections, union inlet
BPT 13 US Straight connections, union inlet
The standard capsule is marked with the letter (E). Other options can be supplied for near to steam (G) or sub cooled (F) operation.

Limiting conditions (to ISO 6552)
Body design conditions PN16.
PMA — Max. allowable pressure 16 barg.
TMA — Max. allowable temperature 260°C.
Cold hydraulic test pressure 24 barg.

Operating range

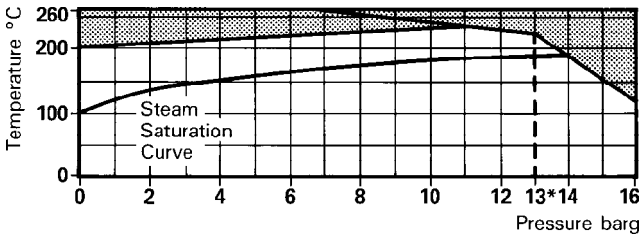

* PMO — Max. Operating pressure, recommended 13 barg.
□ — The product must not be used in this region.

Sizes and pipe connections
½ and ¾ Screwed BSP (BS 21 parallel) or NPT.

Materials

No	Part	Material	
1	Body	Brass	BS 2872 CZ 122
2	Cap	Brass	BS 2872 CZ 122
3	'O' Ring	Synthetic Rubber High Fluorine Fluorocarbon	
4	Capsule	Stainless Steel	
5	Spring	Stainless Steel	BS 2056 302 S26
6	Spacer Plate	Stainless Steel	BS 1449 304 S16
7	Seat	Stainless Steel	BS 970 431 S29
8	Seat Gasket	Stainless Steel	BS 1449 304 S11
9	Union Nut and Tailpiece	Brass	BS 2872 CZ 122

Dimensions (approximate) in millimetres

Size	A	B	C	D	E	Weight
BPT 13A						
½	20	38	53	25	55	0.4 kg
¾	27	40	62	25	55	0.45 kg
BPT 13S						
½	14	76	47	38	55	0.45 kg
¾	20	80	53	40	55	0.5 kg
BPT13UA						
½	20	67	53	25	55	0.5kg
¾	27	75	62	25	55	0.55kg
BPT13US						
½	19	105	52	38	55	0.55kg
¾	22	115	57	40	55	0.6kg

BPT13A

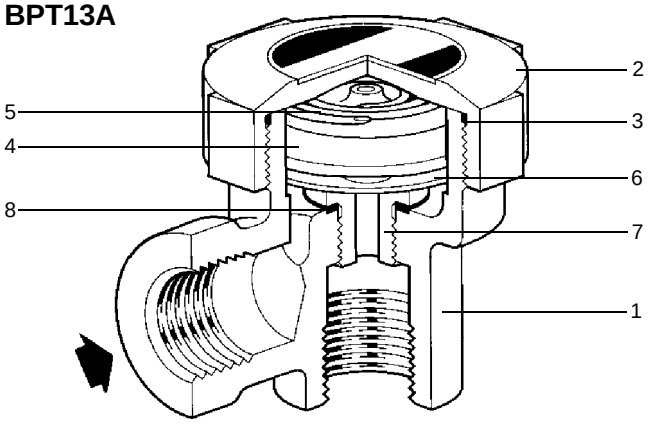

BPT13UA

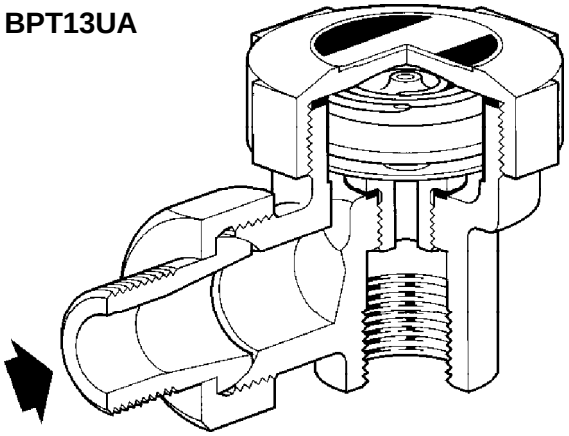

BPT13UA

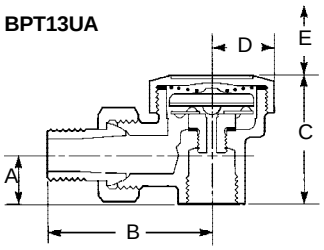

BPT13S

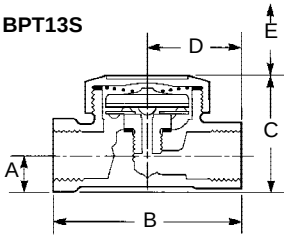

BPT13US

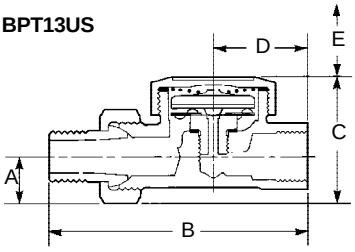

BPT13A

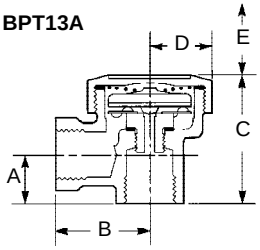

Installation
The trap is designed for installation with the capsule in a horizontal plane and the cap at the top, preferably with a drop leg immediately preceding the trap.

How to specify
1 — ½ SPIRAX SARCO BPT 13 A steam trap screwed BSP.

Local regulations may restrict the use of this product to below the conditions quoted.
In the interests of development and improvement of the product, we reserve the right to change the specification.

© Copyright 1993

Capacities

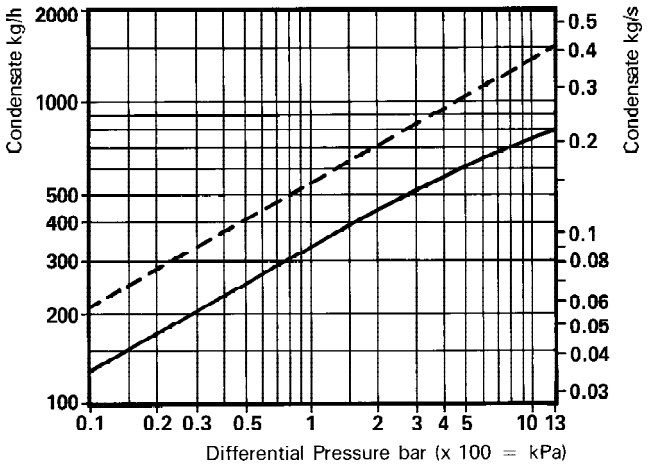

Hot water capacity ———— Cold water capacity - - - - - - - - - - -

Spare parts

The spare parts available are shown in heavy outline. Parts drawn in broken line are not supplied as spares.

AVAILABLE SPARES	
Capsule & Seat Assembly	A,B,C,D,E,F
Cap Gasket(Earlier Models) (Pkt of 3) 'O' Ring (Current Models) (Pkt of 3)	C

(Earlier models were fitted with conventional gaskets. Current models are fitted with an 'O' ring to seal cap).

How to order

Always order spares by using the description given in the column headed Available Spare and stating the size and type of trap.

Example: 1 — Capsule and Seat Assembly for ½ SPIRAX SARCO BPT 13 S. (If a non standard capsule has been fitted the name plate on the cap is marked by the letter 'G' or 'F'. If capsule G or F is required it should be specified on the order). In addition two special elements are available. With a near to steam filling which can be used for example on hospital sterilizers and wet steaming ovens are marked by the letter (G). Capsules with sub-cooled filling, which can be used for example on vacuum return systems are marked by the letter (F). Capsules should be specified on order otherwise a standard version will be supplied.

How to fit

Allow to cool, remove cap and lift out old capsule, spring and spacer plate. Remove valve seat and gasket. Screw in new seat and gasket. Drop in spacer plate. (Note: early spacer plates are unidirectional and must be fitted with the high points uppermost. This does not apply to later models). Replace new capsule, spring and screw on cap using new 'O' ring assembled into groove in top of cap, or in older models using new gasket.
Always fit complete assembly when replacing the capsule.
The recommended tightening torques are:-
Cap 'O' ring 50/60 Nm 50mm A/F
Gasket 90/110 Nm 50mm A/F
Seat (B) 35/40 Nm 17mm A/F

