Inclined tube manometer
For ventilation and air-conditioning
Model A2G-30

for further approvals see page 3

Applications

- For dry, clean, non-aggressive gases, usually air
- Monitoring of ventilators, blowers and filters in air-conditioning and clean room applications

Special features

- Easy to install and remove
- Leakage protection
- Easy-to-read scale



Inclined tube manometer, model A2G-30

Description

The model A2G-30 inclined tube manometer has been specifically designed for ventilation and air-conditioning applications. The measuring instrument enables a clear and easy-to-read analogue display of the measured values.

The model A2G-30 inclined tube manometer is equipped with a reservoir for absorbing the volume expansion of the measuring liquid in case of a strong heating of the measuring liquid (e.g. when exposed to strong radiation from sunlight).

Via an operating button a zero adjustment can be made.

Labels for marking the pressure limits are included in the delivery.

WIKA
Part of your business

Specifications

Inclined tube manometer, model A2G-30	
Measuring range	0 ... 600 Pa, 0 ... 6 kPa, 0 … 2.4 inWC, 0 … 60 mmWC, 0 … 6 mbar
Accuracy	5 Pa/25 Pa
Maximum pressure	200 kPa (2 bar)
Process connection	For hoses with inner diameter 4 mm
Case cover	Plastic
Sealing	NBR
Permissible temperature	-40 ... +60 °C

Dimensions in mm

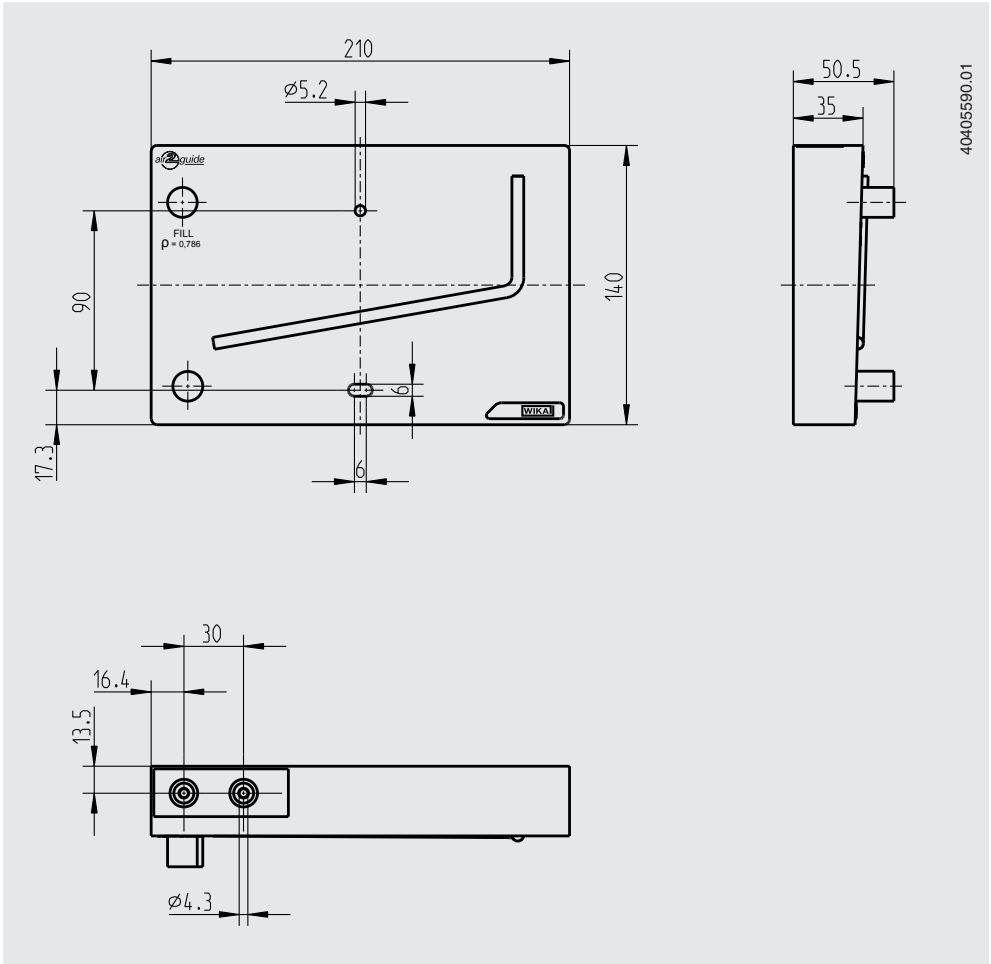

Accessories

Description	Order number
Filling liquid 30 ml 	40213714
Label 	40213731

Approvals

Logo	Description	Country
EAC	**EAC (option)** Import certificate	Eurasian Economic Community
	KazInMetr (option) Metrology, measurement technology	Kazakhstan
-	**MTSCHS (option)** Permission for commissioning	Kazakhstan
	UkrSEPRO (option) Metrology, measurement technology	Ukraine

Certificates (option)

- 2.2 test report

Approvals and certificates, see website

Scope of delivery

- Inclined tube manometer
- Mounting screws
- 30 ml filling liquid
- Red and green pressure limit labels

Ordering information
Model / Unit / Options

© 08/2008 WIKA Alexander Wiegand SE & Co. KG, all rights reserved.
The specifications given in this document represent the state of engineering at the time of publishing.
We reserve the right to make modifications to the specifications and materials.

WIKA Alexander Wiegand SE & Co. KG
Alexander-Wiegand-Straße 30
63911 Klingenberg/Germany
Tel. +49 9372 132-0
Fax +49 9372 132-406
info@wika.de
www.wika.de