stay connected

MICO ELECTRONIC AUXILIARY CIRCUIT, 4 CHANNELS

IN: 24VDC OUT: 24V/1-2-4-6ADC

MICO 4.6
4 channels
Current adjustment 1, 2, 4, 6 A

Fire protection (EN 60950-1) Operating voltage protection (EN 61131-2)

Link to Product

Illustration



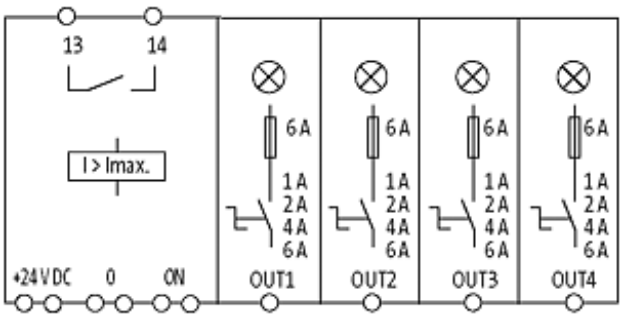

The information in this brochure has been compiled with the utmost care.
Liability for the correctness completeness and topicality of the information is restricted to gross negligence. Version: 08/16

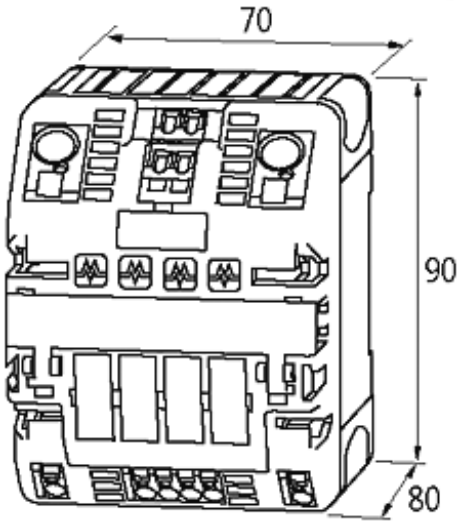

Product may differ from Image

Approvals

General data

Connection	Spring clamp terminals
Input terminals	2 × 16 mm²
Output terminals	per output 1 × 4 mm²
Alarm terminals	2.5 mm²
Bridging concept	two sides, with spring clamp terminals or bridge set (max. 40 A)
Mounting method	DIN-rail mountable TH35 (EN 60715)
Temperature range	0...+55 °C (storage temperature -40...+80 °C)

Technical Data

Operating voltage	24 V DC (18...30 V DC)
Current adjustment	1 A, 2 A, 4 A, 6 A, by countersinked rotary switch, sealed
Inrush capacity	max. 20 mF (per channel)
Group alarm output	potential free 30 V AC/DC, 100 mA
Remote start (ON)	10...30 V DC
Impulse length	min. 20 ms

Commercial data

country of origin	CZ
customs tariff number	85363010
EAN	4048879000055
eClass	27141901
minimum order quantity	1

The information in this brochure has been compiled with the utmost care.
Liability for the correctness completeness and topicality of the information is restricted to gross negligence. Version: 08/16