IEC211

Inductive full-metal sensor

IEB3003QBPKG/AM/P/AS

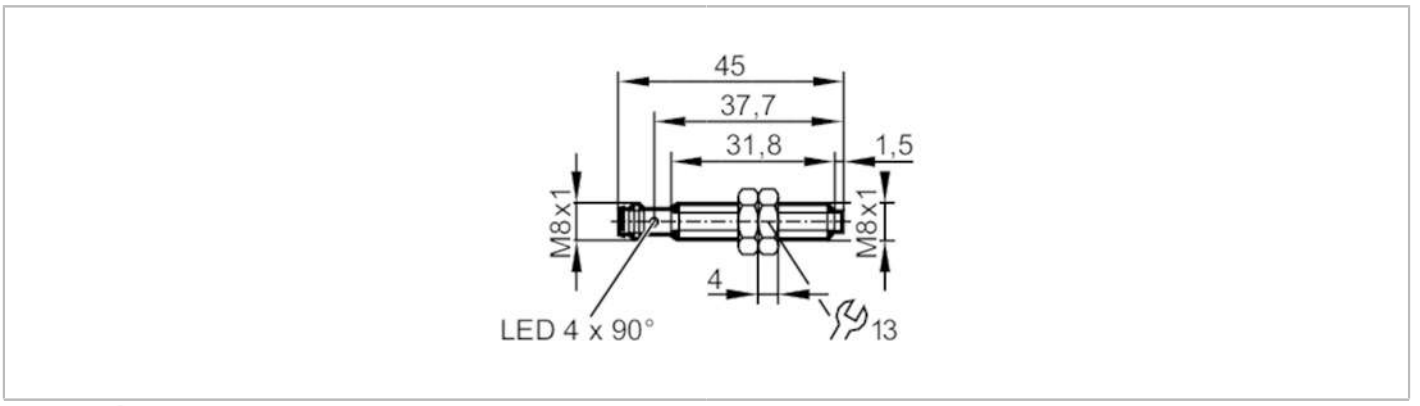

Product characteristics		
Electrical design		PNP
Output function		normally open
Sensing range	[mm]	3
Housing		threaded type
Dimensions	[mm]	M8 x 1 / L = 45
Application		
Special feature		Gold-plated contacts; Increased sensing range; Full-metal housing
Application		Use in machine tools, coolants and lubricants
Pressure rating	[bar]	50
Note on pressure rating		sensing face
Electrical data		
Operating voltage	[V]	10...30 DC
Current consumption	[mA]	< 20
Protection class		III
Reverse polarity protection		yes
Outputs		
Electrical design		PNP
Output function		normally open
Max. voltage drop switching output DC	[V]	2.5
Permanent current rating of switching output DC	[mA]	100
Switching frequency DC	[Hz]	250
Short-circuit protection		yes
Overload protection		yes
Detection zone		
Sensing range	[mm]	3
Real sensing range Sr	[mm]	3 ± 10 %
Operating distance	[mm]	0...2.43
Increased sensing range		yes

IEC211

Inductive full-metal sensor

IEB3003QBPKG/AM/P/AS

Accuracy / deviations			
Correction factor		steel: 1 / stainless steel: 0.9 / brass: 0.4 / aluminium: 0.4 / copper: 0.3	
Hysteresis	[% of Sr]	3...15	
Switch point drift	[% of Sr]	-10...10	
Operating conditions			
Ambient temperature	[°C]	-40...85	
Protection		IP 65; IP 66; IP 67; IP 68; IP 69K; (with ifm socket duly screwed on)	
Tests / approvals			
EMC		EN 61000-4-2 ESD	4 kV CD / 8 kV AD
		EN 61000-4-3 HF radiated	10 V/m
		EN 61000-4-4 Burst	2 kV
		EN 61000-4-6 HF conducted	10 V
		EN 55011	class B
Vibration resistance		EN 60068-2-6 Fc	20 g (10...3000 Hz) / 50 sweep cycles, 1 octave per minute, in 3 axes
Shock resistance		EN 60068-2-27 Ea	100 g 11 ms half-sine; 3 shocks each in every direction of the 3 coordinate axes
Continuous shock resistance		EN 60068-2-27	40 g 6 ms; 4000 shocks each in every direction of the 3 coordinate axes
Fast temperature change		EN 60068-2-14 Na	TA = -40 °C; TB = 85 °C; t1 = 30 min; t2 = < 10 s; 50 cycles
Salt spray test		EN 60068-2-52 Kb	severity level 5 (4 test cycles)
MTTF	[years]	1261	
Embedded software included		yes	
UL approval		Ta	-25...85 °C
		Enclosure type	Type 1
		power supply	Limited Voltage/Current
		UL Approval no.	A017
		File number UL	E174191
Mechanical data			
Weight	[g]	15.7	
Housing		threaded type	
Mounting		quasi flush	
Dimensions	[mm]	M8 x 1 / L = 45	
Thread designation		M8 x 1	
Materials		stainless steel (1.4404 / 316L); sensing face: stainless steel (1.4404 / 316L); LED window: PPSU; lock nuts: stainless steel (1.4404 / 316L)	
Tightening torque	[Nm]	5	
Full-metal housing		yes	
Displays / operating elements			
Display		switching status	4 x 90° LED, yellow
Accessories			
Items supplied		lock nuts: 2	
Remarks			
Pack quantity		1 pcs.	

IEC211

Inductive full-metal sensor

IEB3003QBPKG/AM/P/AS

Electrical connection - plug

Connector: 1 x M8; coding: A; Contacts: gold-plated



Connection

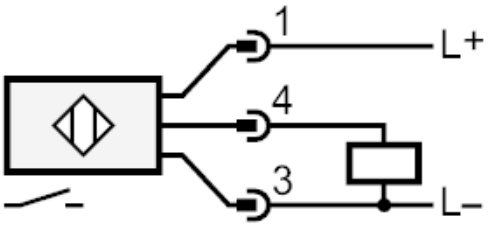

Diagrams and graphs

