# IN5334

## Inductive dual sensor for valve actuators

IND3004DBPKG/T2

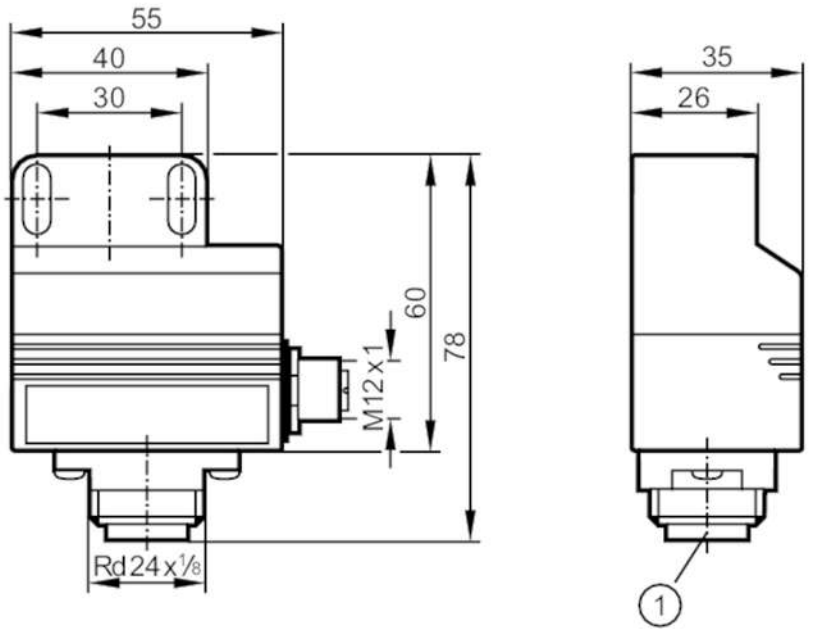


1 field connection

| | | |
|---|---|---|
| **Product characteristics** | | |
| Electrical design | | PNP |
| Output function | | 2 x normally open |
| Sensing range | [mm] | 4 |
| Housing | | rectangular |
| Dimensions | [mm] | 40 x 26 x 60 |
| **Application** | | |
| Application | | for actuators using standard ISO 5211 (VDI/VDE ) mounting |
| **Electrical data** | | |
| Operating voltage | [V] | 10...36 DC |
| Current consumption | [mA] | 20;  (36 V) |
| Protection class | | III |
| Reverse polarity protection | | yes |
| **Outputs** | | |
| Electrical design | | PNP |
| Output function | | 2 x normally open |
| Max. voltage drop switching output DC | [V] | 2.5 |
| Permanent current rating of switching output DC | [mA] | 250 |
| Switching frequency DC | [Hz] | 1300 |
| Short-circuit protection | | yes |
| Type of short-circuit protection | | pulsed |
| Overload protection | | yes |

# IN5334

## Inductive dual sensor for valve actuators

IND3004DBPKG/T2

| | | | |
|---|---|---|---|
| **Detection zone** | | | |
| Sensing range | [mm] | 4 | |
| Real sensing range Sr | [mm] | 4 ± 10 % | |
| Operating distance | [mm] | 0...3.25 | |
| **Accuracy / deviations** | | | |
| Correction factor | | steel: 1 / stainless steel: 0.7 / brass: 0.5 / aluminium: 0.4 / copper: 0.3 | |
| Hysteresis | [% of Sr] | 3...15 | |
| Switch point drift | [% of Sr] | -10...10 | |
| **Operating conditions** | | | |
| Ambient temperature | [°C] | -25...80 | |
| Protection | | IP 67 | |
| **Tests / approvals** | | | |
| EMC | | EN 60947-5-2 | |
| | | EN 55011 | class B |
| MTTF | [years] | 1296 | |
| UL approval | | Ta | 0...40 °C |
| | | Enclosure type | Type 1 |
| | | power supply | Hazardous voltage |
| | | File number UL | E174191 |
| **Mechanical data** | | | |
| Weight | [g] | 171 | |
| Housing | | rectangular | |
| Mounting | | non-flush mountable | |
| Dimensions | [mm] | 40 x 26 x 60 | |
| Materials | | PBT; PC | |
| **Displays / operating elements** | | | |
| Display | | switching status | 2 x LED, yellow |
| **Accessories** | | | |
| Items supplied | | Reinforcement bracket | |
| | | socket head screws: 2 x M5 x 35 | |
| | | washers: 2 | |
| **Remarks** | | | |
| Remarks | | Suitable valves: valves according to NAMUR interface up to max. 20 W | |
| Pack quantity | | 1 pcs. | |

**Electrical connection - plug**

Connector: 1 x Rd24; coding: A

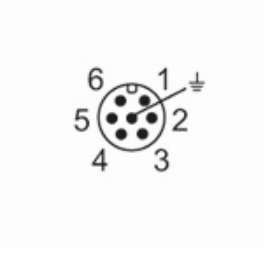

# IN5334

## Inductive dual sensor for valve actuators

IND3004DBPKG/T2

### Connection

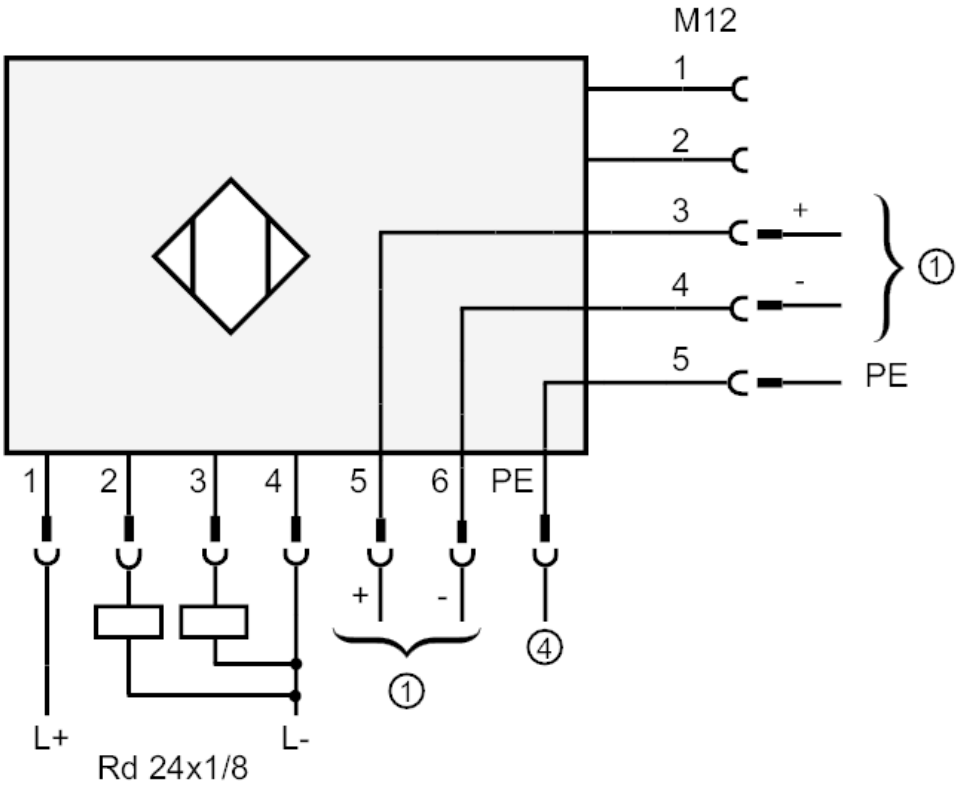


1 = solenoid valve 24 V DC / 20 W

### Electrical connection - socket

Connector: 1 x M12; coding: A

