BExS120 Explosion Proof Flare Horn Alarm Sounder

The flameproof BExS120 alarm sounders are suitable for Zone 1, 2, 21 & 22 applications. Approved to IECEx, ATEX, Ex EAC and INMETRO standards.

Sound level outputs are up to 123dB(A) at 1 metre with a choice of 32 alarm tones and 3 remotely selectable stages.
The BEx explosion proof Ex d range features enclosures manufactured from corrosion proof, marine grade copper free LM6 aluminium with chromate and powder coat finish.
For fire applications the BExS120D 24V dc siren is CPD EN89/106/EEC compliant (EN54-3 tested).

Features

- Marine grade, corrosion proof, LM6 aluminium enclosure.
- Ingress protection IP66/67
- Stainless steel fixings
- Dual M20 cable entries – adaptors available.
- Stopping plug included.
- Reverse polarity diode fitted.
- Automatic synchronisation on multi-sounder system.
- Very large termination area.
- Ratchet adjustable stainless steel 'U' bracket.
- 'Stage Programmable' version available:
  - 45 alarm tones
  - 4 remotely selectable stages
  - Any tone can be assigned to any stage
  - User configurable continuous frequency tone



Approvals

- IECEx KEM 10.0003X
- ATEX KEMA 99ATEX6312X
- TR-CU Ex EAC certificate: RU C-GB.AA71.B.00109
- VdS certificate: G206011
- CPD certificate: 0786-CPD-20225
- SIL 1 compliant to IEC 61508 (2010)
- INMETRO certificate: 10-IEx-0009



Coding

- II 2G Ex d IIB T4 Ta -50° to +70°C
- II 2G Ex d IIC T4 Ta -50° to +55°C
- II 2D Ex tb IIIC T100°C Db Ta -50°C to +55°C
- II 2D Ex tb IIIC T115°C Db Ta -50°C to +70°C

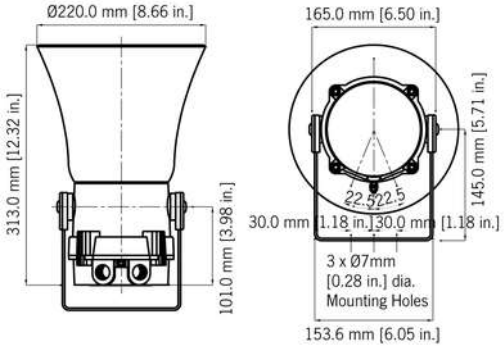

Specification

Maximum output:	123dB(A) @ 1 metre [114dB(A) @ 10ft/3m]
Nominal output:	117dB(A) @ 1m +/- 3dB – Tone 2 [108dB(A) @ 10ft/3m]
No. of tones:	32 (UKOOA / PFEER compliant)
No. of stages:	3
Volume control:	Max. 117dB(A); Min. 108dB(A) – Tone 2
Effective range:	200m/656ft @ 1KHz
Voltages DC:	12vdc; 24vdc; 48vdc
Voltages AC:	115vac; 230vac
Stage switching:	Negative or positive
Ingress protection:	IP66/67
Enclosure matl:	Marine grade copper free LM6 Aluminium
Enclosure finish:	Chromate & powder coated finish – anti-corrosion.
Colour:	RAL3000 Red Grey RAL7038 Special – available on request
BExS120 horn:	High impact UL94 V0 & 5VA FR ABS
Cable entries:	Dual M20 ISO (one stopping plug inc)
Terminals:	0.5 – 2.5mm² (20-14 AWG)
Line monitoring:	Min. 500 Ohm 2w, or 3k3 Ohm 0.5w res. or diode within Exd enclosure (dc versions)
Relative humidity:	95% – Additional tropicalisation is recommended for applications where both high relative humidity and high ambient temperatures exist
Weight:	DC: 3.20kg/7.04lbs AC: 3.40kg/7.48lbs
Option P1:	Stage programmable – 4 remotely selectable stages 45 alarm tones – any tone can be assigned to any stage User configurable continuous frequency tone

*SPL data +/-3dB(A). Measured at optimum voltage.

Part Codes

Version:	Part code:	Description:
Product type:	BExS120	Explosion proof alarm horn sounder
Type:	DF	Ex d, Flare re-entrant horn
Voltage:	DC012	12V dc
	DC024	24V dc
	DC048	48V dc
	AC115	115V ac
	AC230	240V ac
Cable Entry Type: [e]	A	2 x M20x1.5mm
	B	2 × 1/2" NPT – adaptors
	C	2 × 3/4" NPT – adaptors
	D	2 x M25x1.5mm – adaptors
	E	1 × 1/2" NPT – adaptor
	F	1 × 3/4" NPT – adaptor
	G	1 x M25x1.5mm – adaptor
Adaptor/Stopping plug material: [m]	B	Brass
	N	Nickel Plated
	S	Stainless Steel
Bracket matl & tag: [s]	1	A2 304 Stainless Steel
	2	A4 316 Stainless Steel
	3	A2 304 St/St with Equip. Tag
	4	A4 316 St/St with Equip. Tag
Product version: [v]	A1	Default – IECEx, ATEX, Ex EAC & INMETRO – SIL 1
	P1	Stage programmable – IECEx, ATEX, Ex EAC & INMETRO – SIL 1
	T1	Tropicalised – IECEx, ATEX, Ex EAC & INMETRO – SIL 1
Enclosure colour: [x]	R	Red RAL3000
	G	Grey RAL7038
	S	Special – contact E2S
Accessories:	SP65-0001-A2	Pole Mount Bracket Kit 2" St/St A2 (304)
	SP65-0001-A4	Pole Mount Bracket Kit 2" St/St A4 (316)
	SP65-0003-A2	Sunshade – St/St A2 (304)
	SP65-0003-A4	Sunshade – St/St A4 (316)

Current Consumption

Version:	Voltage:	Current:
12V dc	+/-25%	850mA
24V dc	+/-25%	800mA
48V dc	+/-25%	420mA
115V ac 50/60Hz	+10/-10%	180mA
230V ac 50/60Hz	+10/-10%	90mA

Tone table

S 1	Description	S 2	S 3
T 1	Continuous 1000Hz Toxic Gas Alarm	T 31	T 11
T 2	Alternating 800/1000Hz at 0.25s intervals	T 17	T 5
T 3	Slow Whoop 500/1200Hz at 0.3Hz with 0.5s gap ...	T 2	T 5
T 4	Sweeping 800/1000 at 1Hz	T 6	T 5
T 5	Continuous at 2400Hz	T 3	T 27
T 6	Sweeping 2400/2900Hz at 7Hz	T 7	T 5
T 7	Sweeping 2400/2900Hz at 1Hz	T 10	T 5
T 8	Siren 500/1200/500Hz at 0.3Hz	T 2	T 5
T 9	Sawtooth 1200/500Hz at 1Hz	T 15	T 2
T 10	Alternating 2400/2900Hz at 2Hz	T 7	T 5
T 11	Intermittent 1000Hz at 0.5Hz General alarm	T 31	T 1
T 12	Alternating 800/1000Hz at 0.875Hz	T 4	T 5
T 13	Intermittent 2400Hz at 1Hz	T 15	T 5
T 14	Intermittent 800Hz 0.25s on 1s off	T 4	T 5
T 15	Continuous at 800Hz	T 2	T 5
T 16	Intermittent 660Hz 150mS on, 150mS off	T 18	T 5
T 17	Alternating 544Hz (100mS)/440Hz(400mS)	T 2	T 27
T 18	Intermittent 660Hz 1.8s on, 1.8s off	T 2	T 5
T 19	1400Hz to 1600Hz sweep up over 1s -1600Hz to ...	T 2	T 5
T 20	Continuous 660Hz	T 2	T 5
T 21	Alternating 554/440Hz at 1Hz	T 2	T 5
T 22	Intermittent 554Hz at 0.875Hz	T 2	T 5
T 23	800Hz pulsing at 2Hz	T 6	T 5
T 24	Sweeping 800/1000Hz at 50Hz	T 29	T 5
T 25	Sweeping 2400/2900Hz at 50Hz	T 29	T 5
T 26	Simulated bell sound	T 2	T 1
T 27	Continuous 554Hz	T 26	T 5
T 28	Continuous 440Hz	T 2	T 5
T 29	Sweeping 800/1000Hz at 7Hz	T 7	T 5
T 30	420Hz repeating 0.625s on, 0.625s off Austral...	T 32	T 5
T 31	1200/500Hz at 1 Hz Prepare to Abandon Platform	T 11	T 1
T 32	Sweeping 500/1200Hz 3.75s on, 0.25s off 15Hz	T 26	T 1

No liability is accepted for any consequence of the use of this document. The technical specification of this unit is subject to change without notice due to our policy of continual product development. All dimensions are approximate. This unit is sold subject to our standard conditions of sale, a copy of which is available on request.