6007-2Z

SKF Explorer

Dimensions

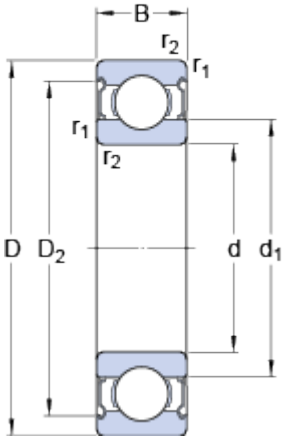

d		35	mm
D		62	mm
B		14	mm
d_1		43.75	mm
D_2		55.61	mm
$r_{1,2}$	min.	1	mm

Abutment dimensions

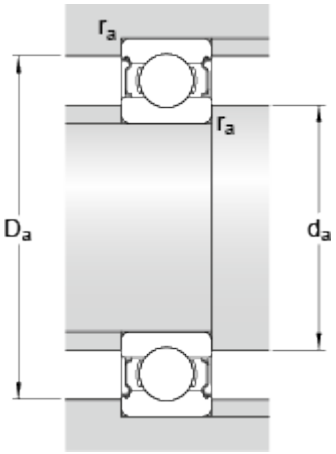

d_a	min.	39.6	mm
d_a	max.	43.7	mm
D_a	max.	57.4	mm
r_a	max.	1	mm

Calculation data

Basic dynamic load rating	C	16.8	kN
Basic static load rating	C_0	10.2	kN
Fatigue load limit	P_u	0.44	kN
Reference speed		24000	r/min
Limiting speed		12000	r/min
Calculation factor	k_r	0.025	
Calculation factor	f_0	15	

Mass

Mass bearing	0.16	kg