C-Series

Single Pole Toggle Switches

The C-Series single pole compact high current toggle switches are ideal for applications with back panel size constraints. These switches feature self-cleaning contacts and ratings up to 20A 125VAC, 10A 250VAC, 1 1/2 HP 125-250VAC. With a rugged metal construction, these switches figure prominently in the Environmental Controls, Marine, Food Service, Vacuum Cleaner and various other general purpose markets with stringent current carrying requirements.



Carling Technologies®
Innovative Designs. Powerful Solutions.

Carling Technologies, Inc.
60 Johnson Avenue • Plainville, CT 06062-1177
Phone: (860) 793-9281 • Fax: (860) 793-9231
Email: sales@carlingtech.com • www.carlingtech.com

Dielectric Strength

1000V - live to dead metal parts and opposite polarity.

Electrical Life

25,000 cycles

Mechanical Life

100,000 cycles

Operating Temperature

32°F to 185°F (0°C to 85°C)

CA201 - 73

1 Base Part Number — 2 Actuator Style

1 BASE PART NUMBER: SERIES/POLES/CIRCUITRY/RATING/TERMINATION
10A 250VAC, 20A 125VAC, 1 1/2 HP 125-250VAC

Single Pole	Solder Lug	.250 Tab	Screw Term.	Wire Leads
On-None-Off	**CA200**	**CA201**	**CA204**	**CA205**
On-None-On	**CB200**	**CB201**	**CB204**	**CB205**

2 ACTUATOR STYLE[1]

	unsealed	sealed	toggle length	bushing length
BAT	**73**	**78**	0.687	0.465

Notes:
1 Additional toggle styles available. Consult factory.

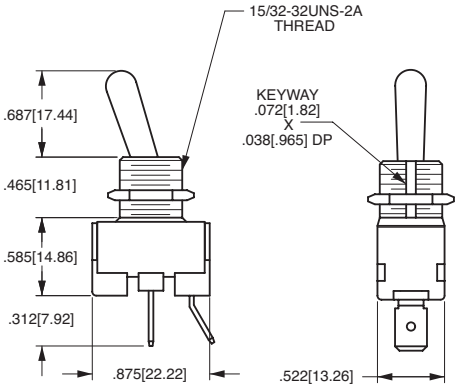

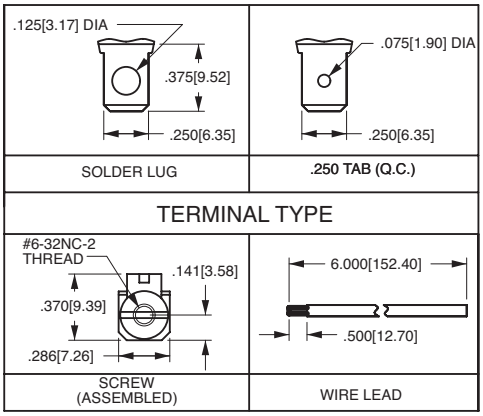

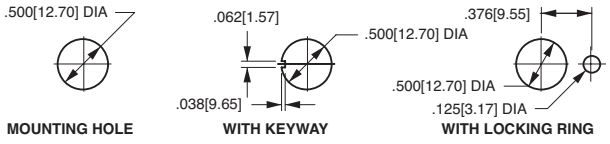

*Manufacturer reserves the right to change product specification without prior notice.

REV_SW_C_0912

60 Johnson Avenue • Plainville, CT 06062–1177 • Phone: (860) 793–9281 • Fax: (860) 793–9231
Email: sales@carlingtech.com • www.carlingtech.com