PN2271

Pressure sensor with display

PN-250-SEN14-MFRKG/US/ /V

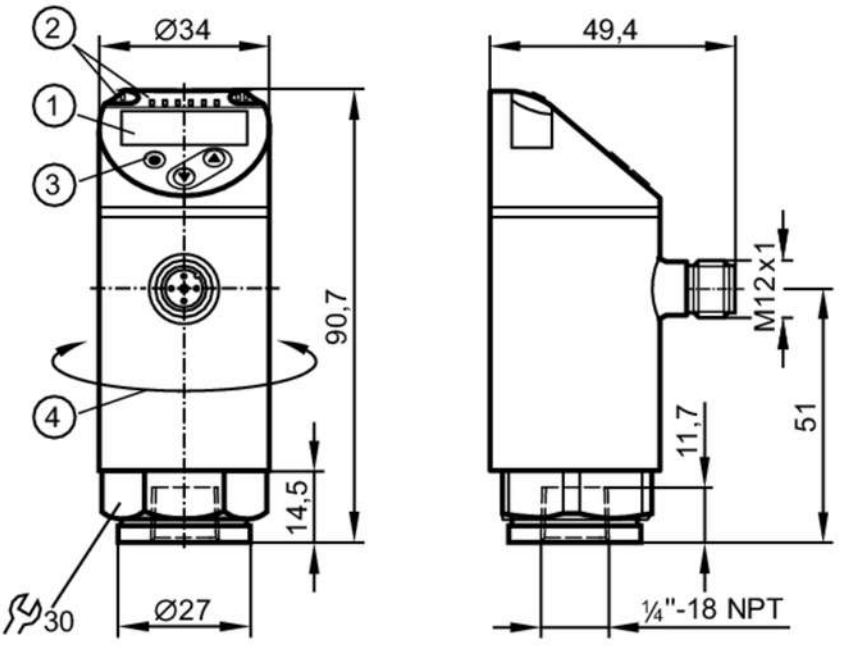

1 alphanumeric display 4-digit red/green
2 LEDs Display unit / switching status
3 programming button
4 upper part of the housing can be rotated 345°

Product characteristics			
Number of inputs and outputs	Number of digital outputs: 2; Number of analogue outputs: 1		
Measuring range	0...250 bar	0...3625 psi	0...25 MPa
Process connection	threaded connection 1/4" NPT internal thread		
Application			
Special feature	Gold-plated contacts		
Measuring element	metallic thin film cell		
Application	for industrial applications		
Media	liquids and gases		
Medium temperature [°C]	-25...80		
Min. bursting pressure	1200 bar	17400 psi	120 MPa
Pressure rating	500 bar	7250 psi	50 MPa
Vacuum resistance	-1000 mbar	-0.1 MPa	
Type of pressure	relative pressure		
MAWP (for applications according to CRN)	500 bar	7250 psi	50 MPa
Electrical data			
Operating voltage [V]	18...30 DC; (to SELV/PELV)		
Current consumption [mA]	< 35		
Min. insulation resistance [MΩ]	100; (500 V DC)		
Protection class	III		

PN2271

Pressure sensor with display

PN-250-SEN14-MFRKG/US/ /V

Reverse polarity protection		yes		
Power-on delay time	[s]	0.3		
Integrated watchdog		yes		
Inputs / outputs				
Number of inputs and outputs		Number of digital outputs: 2; Number of analogue outputs: 1		
Outputs				
Total number of outputs		2		
Output signal		switching signal; analogue signal; IO-Link; (configurable)		
Electrical design		PNP/NPN		
Number of digital outputs		2		
Output function		normally open / normally closed; (parameterisable)		
Max. voltage drop switching output DC	[V]	2		
Permanent current rating of switching output DC	[mA]	250		
Switching frequency DC	[Hz]	< 500		
Number of analogue outputs		1		
Analogue current output	[mA]	4...20; (scalable 1:5)		
Max. load	[Ω]	500		
Analogue voltage output	[V]	0...10; (scalable 1:5)		
Min. load resistance	[Ω]	2000		
Short-circuit protection		yes		
Type of short-circuit protection		pulsed		
Overload protection		yes		
Measuring/setting range				
Measuring range		0...250 bar	0...3625 psi	0...25 MPa
Analogue start point		0...200 bar	0...2900 psi	0...20 MPa
Analogue end point		50...250 bar	725...3625 psi	5...25 MPa
Factory setting / CMPT = 2				
Set point SP		1.5...250 bar	25...3625 psi	0.15...25 MPa
Reset point rP		0.5...249 bar	10...3610 psi	0.05...24.9 MPa
Min. difference between SP and rP		1.5 bar	15 psi	0.15 MPa
In steps of		0.5 bar	5 psi	0.05 MPa
Status_B High Resolution / CMPT = 3				
Set point SP		1.6...250 bar	23...3626 psi	0.16...25 MPa
Reset point rP		0.5...249 bar	8...3611 psi	0.05...24.9 MPa
Min. difference between SP and rP		1.1 bar	15 psi	0.11 MPa
In steps of		0.1 bar	1 psi	0.01 MPa
Accuracy / deviations				
Switch point accuracy	[% of the span]	< ± 0,4; (Turn down 1:1)		
Repeatability	[% of the span]	< ± 0,1; (with temperature fluctuations < 10 K; Turn down 1:1)		
Characteristics deviation		< ± 0,25 (BFSL) / < ± 0,5 (LS); (Turn down 1:1; BFSL = Best Fit Straight Line; LS = limit value setting)		

PN2271

Pressure sensor with display

PN-250-SEN14-MFRKG/US/ /V

[% of the span]		
Hysteresis deviation [% of the span]		< ± 0,1; (Turn down 1:1)
Long-term stability [% of the span]		< ± 0,05; (Turn down 1:1; per 6 months)
Temperature coefficient zero point [% of the span / 10 K]		0,2; (-25...80 °C)
Temperature coefficient span [% of the span / 10 K]		0,2; (-25...80 °C)
Notes on the accuracy / deviation		switch point accuracy, linearity error under DNV GL: < ± 1%: < ± 1%
Response times		
Response time [ms]		< 1.5
Delay time programmable dS, dr [s]		0...50
Damping process value dAP [s]		0...4
Damping for the analogue output dAA [s]		0...4
Max. response time analogue output [ms]		3
Software / programming		
Parameter setting options		hysteresis / window; normally open / normally closed; switch-on/ switch-off delay; Damping; Display unit; current/voltage output
Interfaces		
Communication interface		IO-Link
Transmission type		COM2 (38,4 kBaud)
IO-Link revision		1.1
SDCI standard		IEC 61131-9
SIO mode		yes
Required master port type		A; (when pin 2 not connected: B)
Supported DeviceIDs	**Type of operation**	**DeviceID**
	Factory setting / CMPT = 2	470
	Status_B High Resolution / CMPT = 3	986
Note		For further information please see the IODD PDF file under "Downloads"
Factory setting / CMPT = 2		
Profiles		Smart Sensor: Process Data Variable; Device Identification, Device Diagnosis
Min. process cycle time [ms]		2.3
IO-Link resolution pressure [bar]		0.1
IO-Link process data (cyclical)	**function**	**bit length**
	pressure	14
	binary switching information	2
IO-Link functions (acyclical)		application specific tag
Status_B High Resolution / CMPT = 3		
Profiles		Smart Sensor ED2: Digital Measuring Sensor (0x000A), Identification and Diagnosis (0x4000)
Min. process cycle time [ms]		3

PN2271

Pressure sensor with display

PN-250-SEN14-MFRKG/US/ /V

IO-Link resolution pressure	[bar]	0.1	
IO-Link process data (cyclical)		**function**	**bit length**
		pressure	16
		device status	4
		binary switching information	2
IO-Link functions (acyclical)		application specific tag	
Operating conditions			
Ambient temperature	[°C]	-25...80	
Storage temperature	[°C]	-40...100	
Protection		IP 65; IP 67	
Tests / approvals			
EMC		DIN EN 61000-6-2	
		DIN EN 61000-6-3	
Shock resistance		DIN EN 60068-2-27	50 g (11 ms)
Vibration resistance		DIN EN 60068-2-6	20 g (10...2000 Hz)
MTTF	[years]	124	
UL approval		UL Approval no.	J014
Pressure Equipment Directive		Sound engineering practice; can be used for group 2 fluids; group 1 fluids on request	
Mechanical data			
Weight	[g]	219.5	
Housing		cylindrical	
Dimensions	[mm]	Ø 34 / L = 90.7	
Materials		stainless steel (630/1.4542/17-4 PH); stainless steel (316L/1.4404); PBT+PC-GF30; PBT-GF20; PC	
Materials (wetted parts)		stainless steel (630/1.4542/17-4 PH)	
Min. pressure cycles		100 million	
Tightening torque	[Nm]	> 50; (depends on lubrication, seal and pressure rating)	
Process connection		threaded connection 1/4" NPT internal thread	
Restrictor element integrated		no (can be retrofitted)	
Displays / operating elements			
Display		Display unit	3 x LED, green (bar, psi, MPa)
		switching status	2 x LED, yellow
		measured values	alphanumeric display, red/green 4-digit
Remarks			
Pack quantity		1 pcs.	

Electrical connection

Connector: 1 x M12; coding: A; Contacts: gold-plated



PN2271

Pressure sensor with display

PN-250-SEN14-MFRKG/US/ /V

Connection

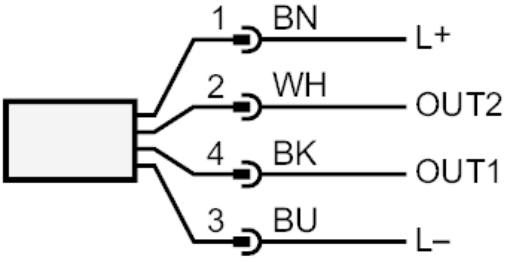

OUT1	switching output IO-Link
OUT2	switching output analogue output
	Core colours :
BK =	black
BN =	brown
BU =	blue
WH =	white