

Main switchSurface mounting

Part no. **P3-100/I5/SVB-SW**

Article no. **207374**

IP65

Delivery programme

Product range			Switch-disconnectors
Basic function			Main switches Maintenance switches Manual override switches
Part group reference			P3
Design			Surface mounting
			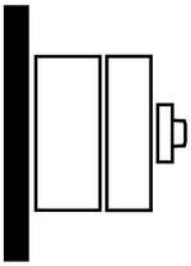
Protection type			IP65
			totally insulated
Emergency stop			without emergency switching off/emergency stop function
			With black rotary handle and locking ring
Locking facility			Lockable in the 0 (Off) position
			without auxiliary contacts
Contact sequence			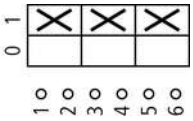
Front plate no.			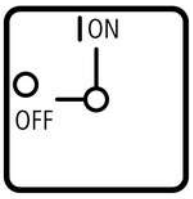 FS 908
Main conducting paths			
No. of poles		M	3
Auxiliary contacts			
		N/O	0
		B	0
Max. motor rating			
AC-23A			
400/415 V 50-60 Hz			
400 V	P	kW	50
Rated uninterrupted current	I_u	A	100

Approvals

Product Standards	UL 508; CSA-C22.2 No. 14-05; IEC/EN 60947-3; CE marking
UL File No.	E36332
UL CCN	NLRV

CSA File No.	12528
CSA Class No.	3211-05
NA Certification	UL listed, CSA certified
Specially designed for NA	Yes, in combination with "+NA-I5" (105869)
Suitable for	Branch circuits, suitable as motor disconnect
Degree of Protection	IEC: IP65; UL/CSA Type 3R, 12

General

Standards			IEC/EN 60947, VDE 0660, IEC/EN 60204, CSA, UL switch disconnector according to IEC/EN 60947-3
Lifespan, mechanical	Operations	x 10^6	0.1
Maximum operating frequency		Operations/h	30
Climatic proofing			Damp heat, constant, to IEC 60068-2-78; Damp heat, cyclical, to IEC 60068-2-30
Ambient temperature		°C	
Open		°C	- 25 - 50
Enclosed		°C	- 25 - 40
Mounting position			As required
Mechanical shock resistance to IEC 60068-2-27	Half-sinusoidal shock 20 ms	g	> 15

Contacts

Rated operational voltage	U_e	V AC	690
Rated impulse withstand voltage	U_{imp}	V AC	6000
Overvoltage category/pollution degree			III/3
Rated uninterrupted current	I_u	A	
open	I_u	A	100
Enclosed	I_u	A	100
Load rating with intermittent operation, class 12			
AB 25 % DF		x I_e	2
AB 40 % DF		x I_e	1.6
AB 60 % DF		x I_e	1.3
Short-circuit rating			
Fuse		A gG/gL	100
Rated short-time withstand current (1 s current)	I_{cw}	A_{rms}	2000
Switching angles		°	90
Current heat loss per contact at I_e		W	7.5

Terminal capacities

Solid or stranded		mm^2	1 x (2.5 - 35) 2 x (2.5 - 10)
Flexible with ferrules to DIN 46228		mm^2	
Flexible with ferrule		mm^2	1 x (1.5 - 25) 2 x (1.5 - 6)
Terminal screw			M5
Tightening torque		Nm	3

Switching capacity

AC		x U_s	
Rated making capacity cos φ = 0.35		A	950
Rated breaking capacity, motor load switch cos φ = 0.35		A	
230 V		A	760
400 V		A	740
500 V		A	880
690 V		A	520
Rated operational current 440 V load-break switch AC-21A	I_e	A	100
Rating, AC-3 motor load switch	P	kW	
220 V 230 V	P	kW	22

380 V 400 V	P	kW	40
500 V	P	kW	45
660 V 690 V	P	kW	22
AC-23A Motor load switches (main switches maintenance switches)	P	kW	
230 V	P	kW	30
400 V	P	kW	50
500 V	P	kW	67
690 V	P	kW	65
DC		x U_s	
DC-1, Load-break switches L/R = 1 ms			
Rated operational current	I_e	A	100
Voltage per contact pair in series		V	60
DC-23A, motor load switch L/R = 15 ms			
24 V			
Rated operational current	I_e	A	50
Contacts		Quantity	1
48 V			
Rated operational current	I_e	A	50
Contacts		Quantity	2
60 V			
Rated operational current	I_e	A	50
Contacts		Quantity	3
120 V			
Rated operational current	I_e	A	25
Contacts		Quantity	3

Notes

Notes Main switch characteristics to IEC/EN 60204; positive opening of contacts, operator element positively located on shaft
The rated uninterrupted current I_u is stated at max. connected cross-section.
For terminal capacity solid, stranded and flexible:
Max. 2 cross-section sizes difference admissible when using 2 conductors.

Technical data ETIM 4.0

Number of auxiliary contacts as normally open contact			0
Number of auxiliary contacts as normally closed contact			0
Rated permanent current Iu		A	100
Number of poles			3
Conditioned rated short-circuit current Iq		kA	0
Degree of protection (IP), front side			IP65
Number of auxiliary contacts as change-over contact			0
Interlockable			YES
Motor drive integrated			No
Connection type main current circuit			Screw connection
Version as emergency stop installation			No
Type of control element			-
Version as main switch			YES
Version as switch disconnector compact			YES
Version as safety switch			No
Version as maintenance-/service switch			YES
Rated operation power at AC-23, 400V		kWh	50
Rated operation power AC-3, 400 V		kWh	37
Suitable for ground mounting			YES
Suitable for front mounting			No
Suitable for front mounting center			No
Suitable for distribution board installation			No
Suitable for intermediate mounting			No
Max. rated operation voltage Ue AC		V	690

Motor drive optional			No
Voltage release optional			No
Device construction			Complete device in housing

Characteristics

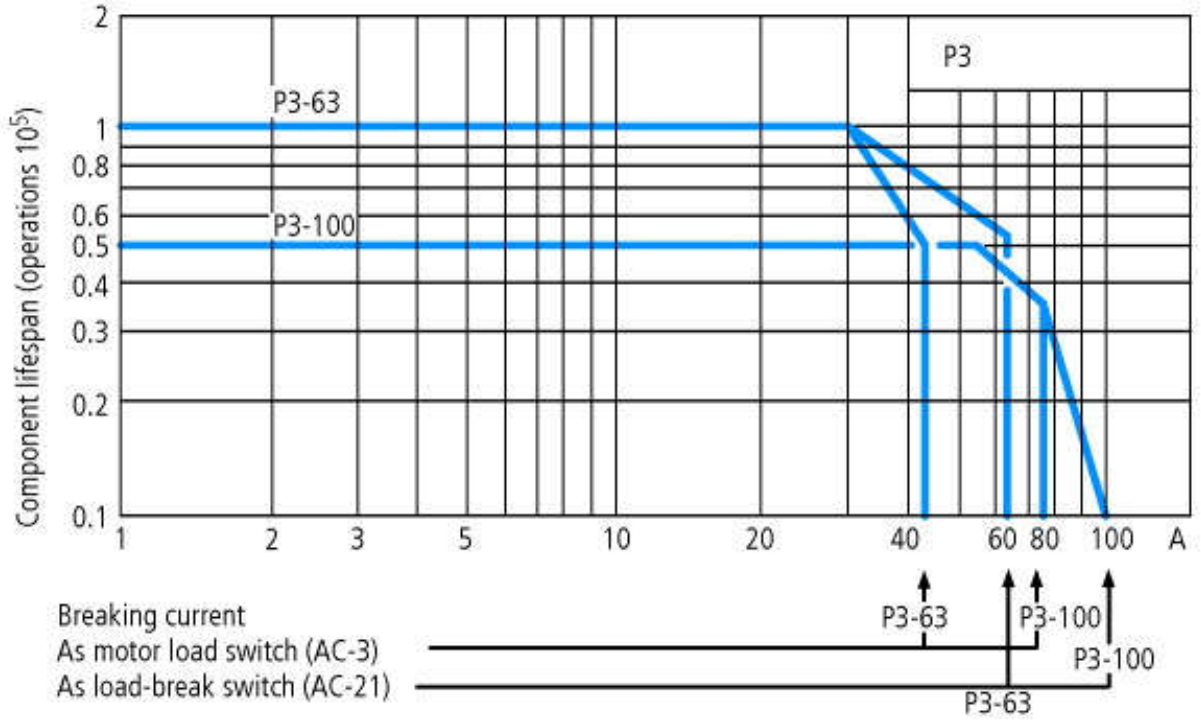

For utilisation category AC-4 (extreme load: 100 % inching, reversing or plugging)
The blocked rotor current of the motor should not exceed the rated current of the switch for AC-21A to ensure a reasonable device lifespan.

Dimensions

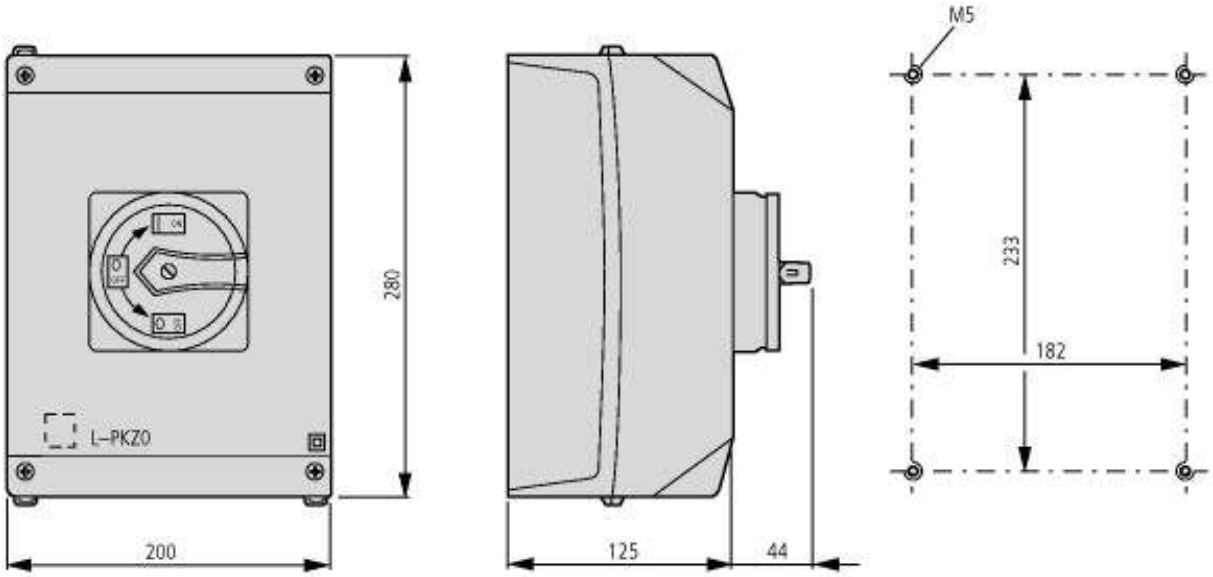

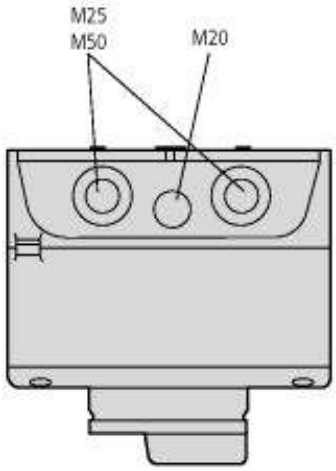

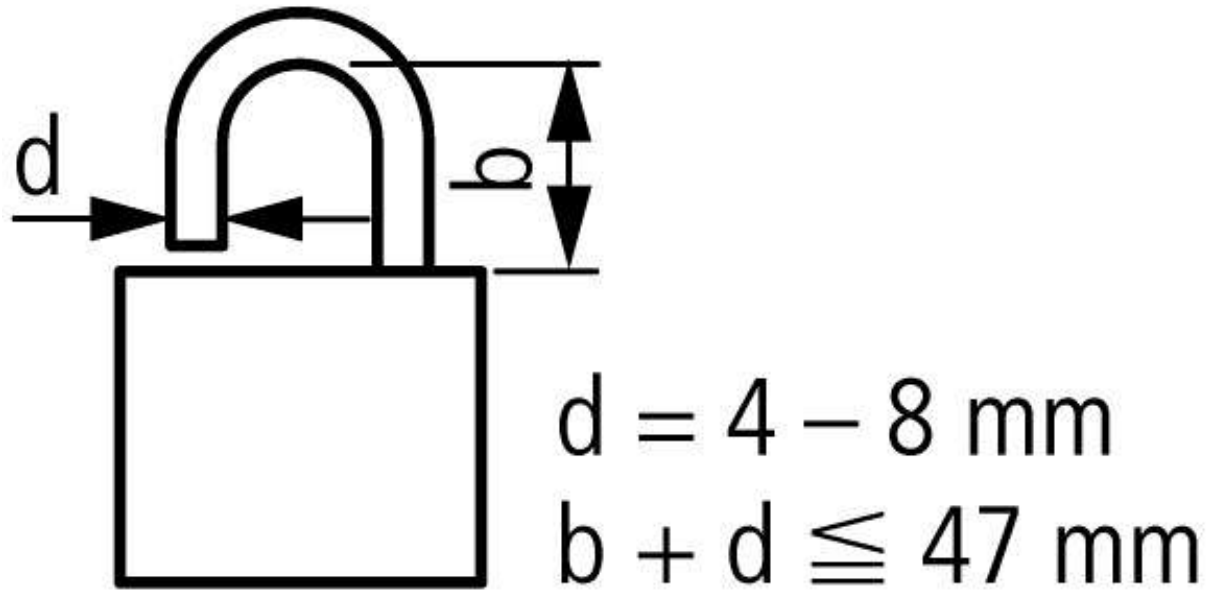

3 Padlocks

Additional product information (links)

IL03801010Z (AWA1150-1982) Cam switch: switch-disconnector	
IL03801010Z (AWA1150-1982) Cam switch: switch-disconnector	ftp://ftp.moeller.net/DOCUMENTATION/AWA_INSTRUCTIONS/IL03801010Z2011_06.pdf

http://ecat.moeller.net/flip-cat/?edition=HPLEN&startpage=4.87

© 11/2012 by Eaton Industries GmbH