DRAWING No 49–769024/26 Sht. 1	DO NOT SCALE	DIMENSIONS IN MILLIMETRES THIRD ANGLE PROJECTION	CAD SYSTEM: 1	CAD FILE NAME: C:\mydoc.\acadwork\ear\497624tb.dwg.

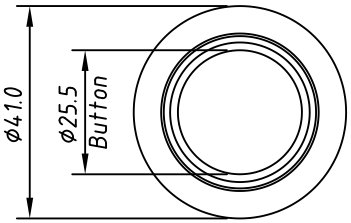

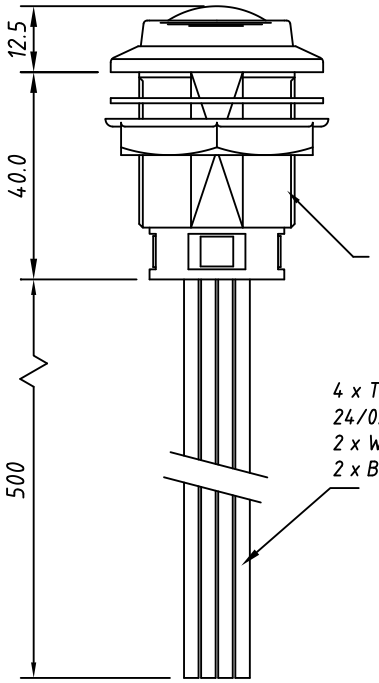

4 x TRI-RATED SWITCH GEAR WIRE,
24/0.20mm (0.75mm²), 20AWG. PVC. INSULATED.
2 x WHITE, NC TERMINALS.
2 x BLACK, NO TERMINALS.

ENVIRONMENTAL:-

TEMPERATURE RANGE:- -40°C +80°C

INGRESS PROTECTION:- IP 67

SHOCK:- 50 G

IMPACT:- 2 JOULES

DESIGNED IN ACORDANCE WITH
BRITISH COAL (N.C.B.) NON-SPARK
METALS SPECIFICATION 481/1965.

MECHANICAL:-

DIMENSIONS:-

THREAD DIMAETER (NOM) 30
BODY ACROSS FLATS (NOM) 27.5
PANEL THICKNESS (MAX) 25
INSTALATION TORQUE 2 to 5Nm

CONSTRUCTION:-

FULLY SEALED.

FINISH:-

BODY	BLACK
BUTTON	(colour, see chart) POLYETHER BLOCK AMIDE

ELECTRICAL:-

CONFIGURATION SP NO

CURRENT:-

6 AMP @ 250 Vac RESISTIVE
10 AMPS WITH LIFE AND MAX TEMP
DE-RATED TO 50,000 AND 70°C.

LIFE:- 100,000 CYCLES

DIELECTRIC STRENGTH:- 1000 Vrms

INSULTATION RESISTANCE:- 1 G Ω

CONTACT RESISTANCE:- 25m Ω
(INITIAL SWITCH ONLY)

TL. SWITCH No.	BUTTON COLOUR	RS PART No.
49-769024	RED	315-9723
49-769025	GREEN	315-9739
49-769026	BLACK	315-9745

ISS	ECN	SIGN	DATE	ISS	ECN	SIGN	DATE
A	86767	BV	21.8.98	·	·	·	·
B	87064	BV	22.9.00	·	·	·	·
·	·	·	·	·	·	·	·
·	·	·	·	·	·	·	·
·	·	·	·	·	·	·	·

NOTICE
ALL RIGHTS RESERVED: UNAUTHORISED USE, DISCLOSURE OR REPRODUCTION IN WHOLE OR IN PART IS STRICTLY PROHIBITED.
© 2000

ITW Switches & Connectors
ITW Switches
ITW Switchpanels
ITW McMurdo Connectors
ITW Pancon
Norway Road
Hilsea
Portsmouth
Hants PO3 5HT
Tel: +44 (0)1705 694971
Fax: +44 (0)1705 666352
Internet: www.ltwswitchcon.com

STANDARD TOLERANCES
NO PLACE DEC. ±0.5
1 PLACE DEC. ±0.2
2 PLACE DEC. ±0.1
DIAMETERS ±0.05
ANGULAR ±0.5°
UNLESS OTHERWISE STATED
SCALE: 2:1

MATERIAL
FINISH

DRAWN	DATE	SIGN	DATE
·	·	·	·

TITLE SEALED SWITCH
FLEXIBUTTON SW. RS. TL.

DRAWING No 49–769024/26 Sht. 1 A3