O4E201

Through-beam sensor receiver

O4E-HPKG/US100

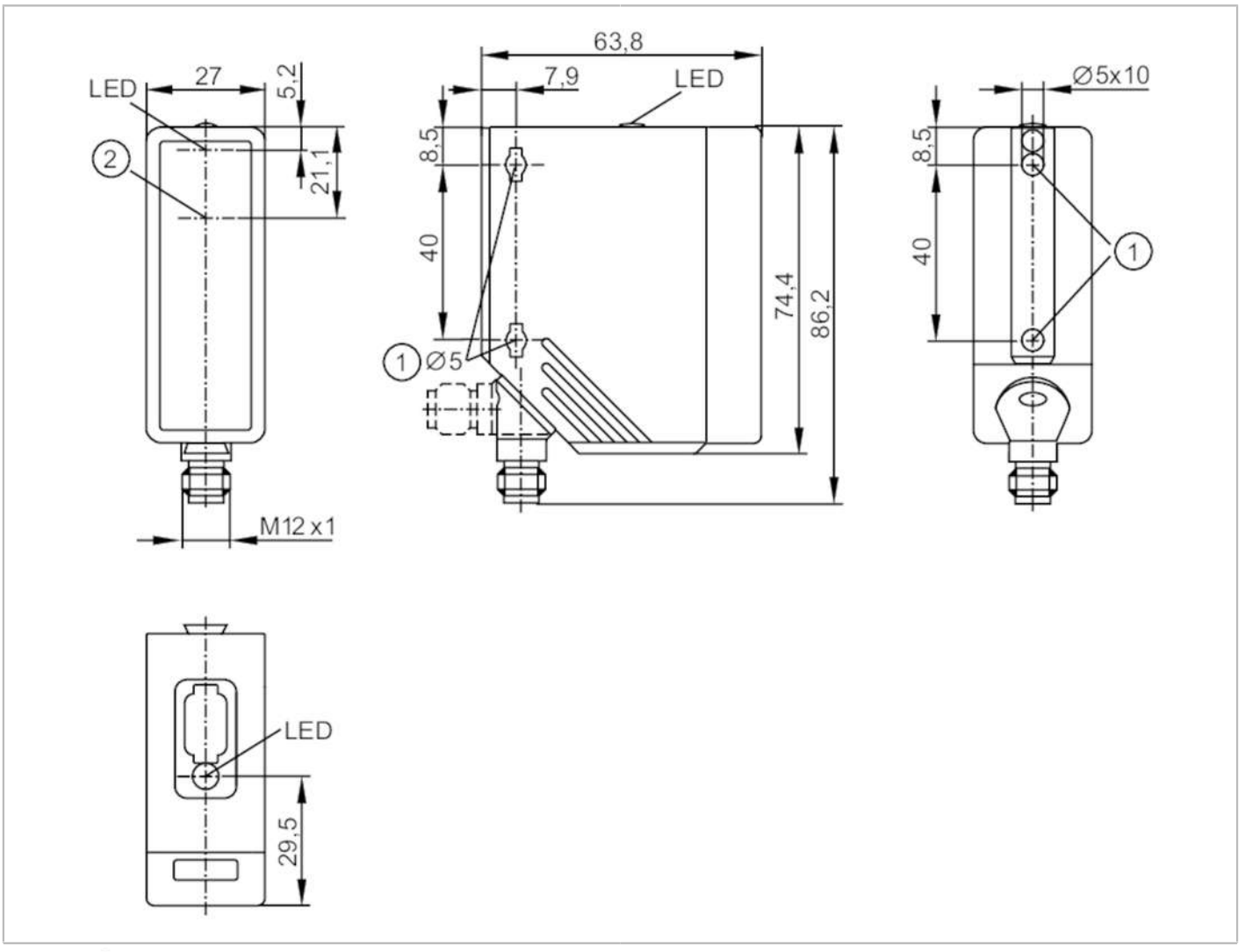

Product characteristics		
Type of light		red light
Housing		rectangular
Application		
Function principle		Through-beam sensor
Electrical data		
Operating voltage	[V]	10...36 DC; ("supply class 2" to cULus)
Current consumption	[mA]	12
Protection class		II
Reverse polarity protection		yes
Type of light		red light
Wave length	[nm]	624
Outputs		
Electrical design		PNP
Output function		light-on mode

O4E201

Through-beam sensor receiver

O4E-HPKG/US100

Max. voltage drop switching output DC	[V]	2.5	
Permanent current rating of switching output DC	[mA]	200	
Switching frequency DC	[Hz]	1000	
Short-circuit protection		yes	
Type of short-circuit protection		pulsed	
Overload protection		yes	
Detection zone			
Transmitter / receiver		receiver	
Range	[m]	0...50	
Range adjustable		no	
Operating conditions			
Ambient temperature	[°C]	-25...60	
Protection		IP 67	
Tests / approvals			
EMC		EN 60947-5-2	
MTTF	[years]	1073	
Mechanical data			
Weight	[g]	117.5	
Housing		rectangular	
Dimensions	[mm]	74.4 x 27 x 63.8	
Materials		housing: PA; bezel: stainless steel; LED window: PC	
Lens material		PMMA	
Lens alignment		side lens	
Displays / operating elements			
Display		switching status	2 x LED, yellow
Remarks			
Pack quantity		1 pcs.	
Electrical connection			

Connector: 1 x M12; coding: A



O4E201

Through-beam sensor receiver

O4E-HPKG/US100

Connection

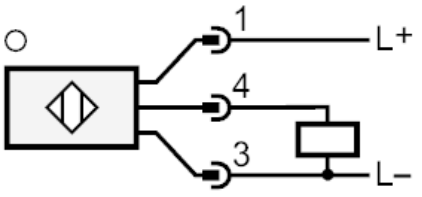

Diagrams and graphs

excess gain graph

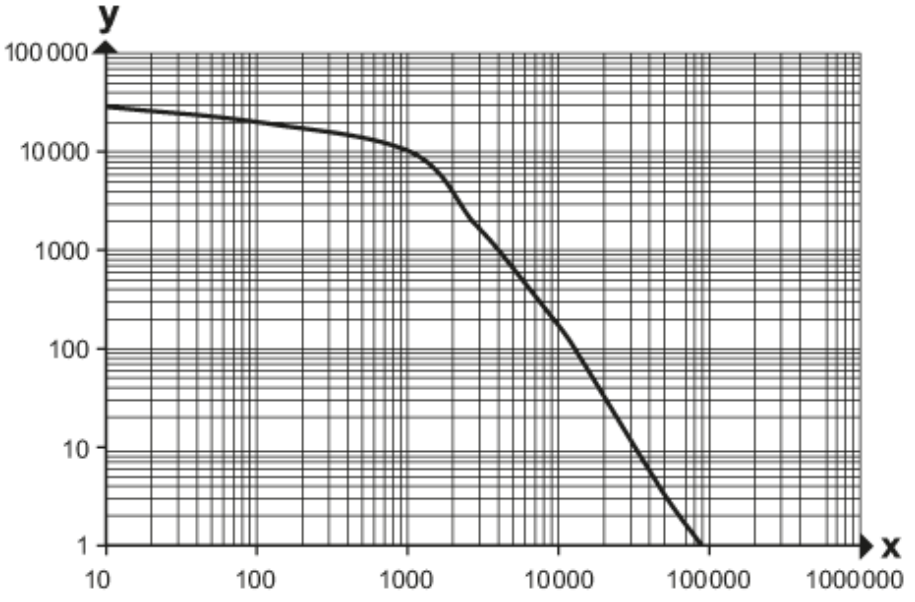

x: Abstand [mm]

y: Funktionsreservefaktor