Datenblatt - Fiche technique - Data sheet

11.04.5786



ROLINE DisplayPort Kabel DP - UHDTV, ST/ST, schwarz, 2,0 m

ROLINE Câble DisplayPort DP - UHDTV, M/M, noir, 2,0 m

ROLINE DisplayPort Cable, DP - UHDTV, M/M, black, 2.0 m

RoHS Compliant

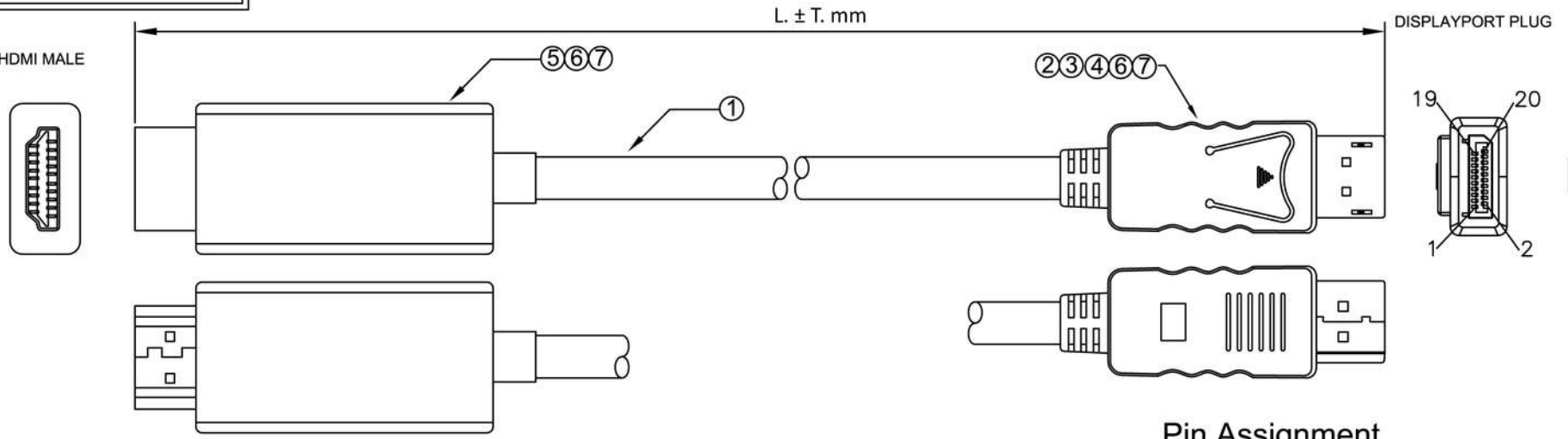

Table：

P/N	Length
11.04.5785	1000 ± 20 mm
11.04.5786	2000 ± 30 mm
11.04.5787	3000 ± 40 mm

Test requirement:

Resolution:4K*2K@60HZ

1	Cable	[30AWG(7/0.1T)x1P+D+AL+MYLAR]x5P+30AWG(7/0.1T)x5C+F+ADB16/5/0.12(AL)。 Jacket：PVC, Black。 O.D.=6.0±0.20mm。
2	DP Connector	Male, Solder, Gold Plated。
3	Clip	DP
4	Shell	DP：ABS, Black
5	HDMI Connector	DP to HDMI PCB'A, Gold Plated Shell ：ABS, Black
6	PE	LDPE
7	PVC	60P, Black

Pin Assignment

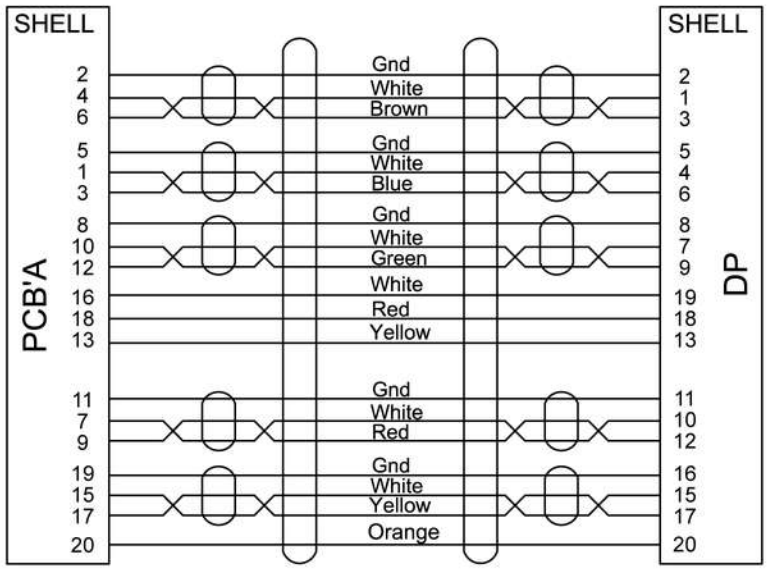

REV.	DATE	CONTENTS OF CHANGE	DESIGNER
1			
2			
3			
4			
5			

TOL ± RANGE	Pla	Met	Ins	Por	V Cab	Pac	Gas	DIS
0~6	0.1	0.1	0.1	0.2	0.5	1	0.5	0.2
6~30	0.1	0.1	.15	.25	1	1	0.5	.25
30~80	0.1	.15	0.2	0.3	2	1.5	1	0.3
80~180	.15	.15	.25	0.3	2	2	1	.45
180~315	.15	0.2	0.3	0.4	2.5	2	1	0.6
315~800	0.2	0.3	0.4	0.5	3	3	2	1.1

APPROVAL	CHECK	DRAWING	DESIGN
PHILIP	PHILIP		TREE
SCALE	1:1	UNIT	MM

DRAWING NAME	ROLINE DisplayPort Cable, DP-UHDTV, M/M
DATE	2016-05-6
PART NO.	11.04.5785, 11.04.5786, 11.04.5787
R00	

SECOMP

A3