E2D101

Mounting set for photoelectric distance sensors

MOUNTING SET O1D 12MM

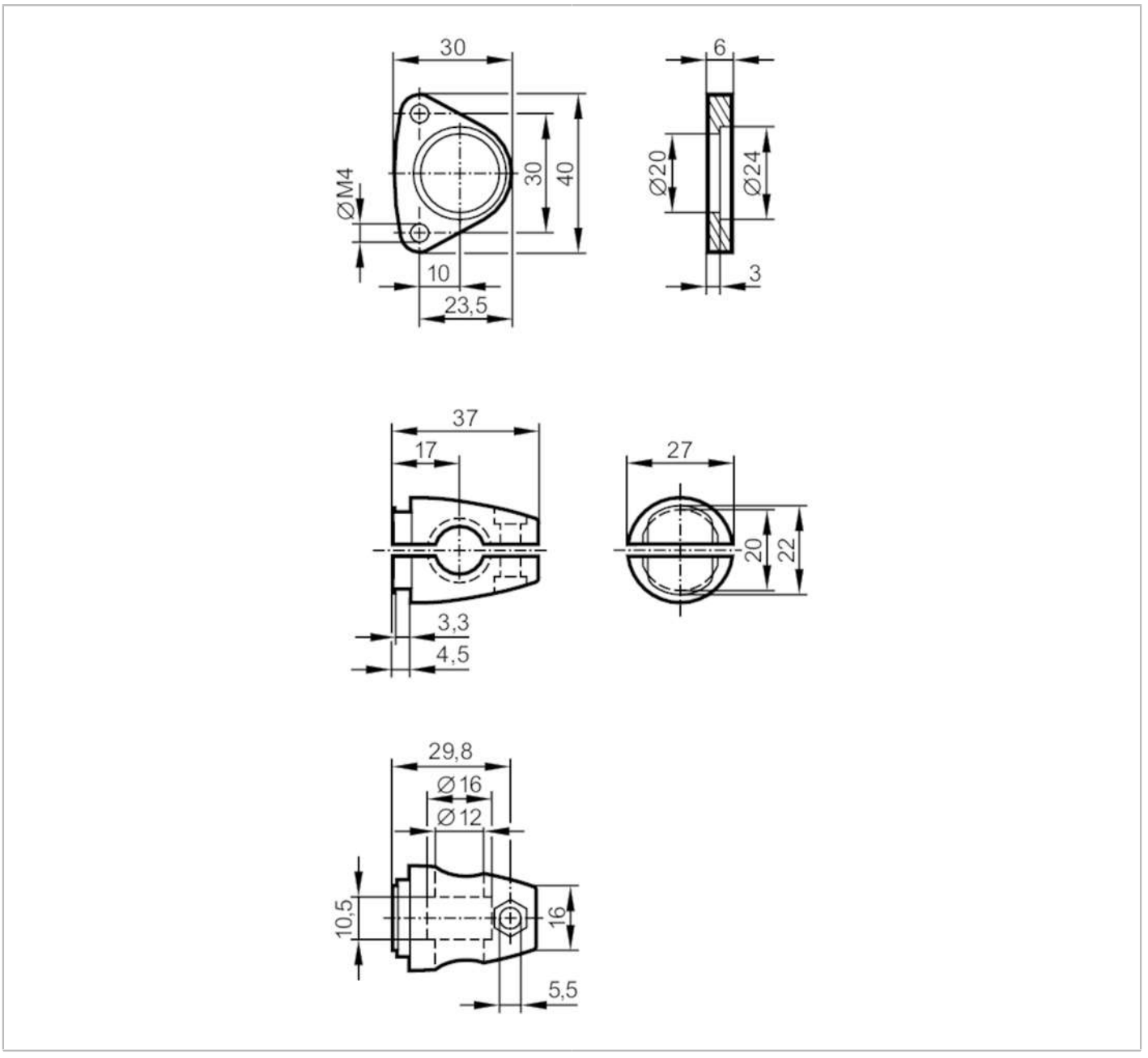

Application		
Design		clamp mounting
Mechanical data		
Weight	[g]	118.5
Type of mounting		Mounting rod; (Ø 12 mm)
Materials		fixture: stainless steel (1.4301 / 304); Clamp: stainless steel (1.4408); screws: stainless steel; nut: stainless steel
Accessories		
Items supplied		socket head screws: 2 x M4 x 45
Remarks		
Pack quantity		1 pcs.