HPS-500-G Pressure Switch

Herga Technology Ltd

- Pressure, vacuum and differential switching to very high sensitivity
- Factory set or adjustable actuation setpoint
- Miniature size - ideal for OEM applications
- Wide choice of form factors for maximum installation flexibility
- Long life with high reliability
- UL approved

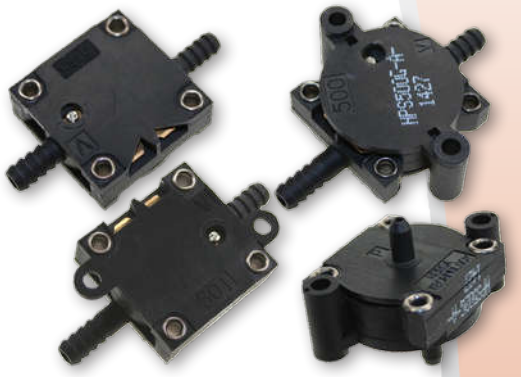

General Specifications

Actuation pressure / Setpoint tolerance	See detailed information below
Switch type	Single pole, single throw, normally open (Normally closed - contact Herga)
Contact voltage	30 V max. AC/DC, 120 VAC Neon Lamp load
Current rating	40 mA max. resistive DC
Contact resistance	1Ω or less at 150% of actuation pressure
Proof pressure	See detailed information below
Material	Flame Retardant 10% Glass Filled Polycarbonate, Urethane diaphragm* * Range "A" = Teflon diaphragm as standard
Mechanical life	20 x 10^6 cycles
Temperature range	+4°C to +65°C, Some setpoint deviation may occur throughout the temperature range For increased temperature range of -40 to +96 °C contact us
Approval	UL508 approved. File number NKPZ8.E41523

Model Part Number	Form Factor (see drawings)	Pressure range	Setpoint tolerance	Proof Pressure
HPS-500-G RANGE - A	 Form 1	0.25 to 1.25 mbar [0.10" to 0.50" H2O]	± 0.25 mbar [± 0.1" H2O]	12 mbar (5" H2O)
HPS-500-G RANGE - B		1.25 to 5.0 mbar [0.50" to 2.0" H2O]	± 0.50 mbar [± 0.2" H2O]	37 mbar (15" H2O)
HPS-500-G RANGE - C		5 to 25 mbar [2" to 10" H2O]	± 1.25 mbar [± 0.5" H2O]	174 mbar (70" H2O)
HPS-500-G RANGE - D		25 to 75 mbar [10" to 30" H2O]	± 10 %	623 mbar (250" H2O)
HPS-500-G RANGE - E		75 to 374 mbar [30" to 150" H2O]	± 10 %	1.4 bar (20 PSI) (550" H2O)
HPS-500-G RANGE - F		374 to 1370 mbar [150" to 550" H2O]	± 10 %	1.7 bar (25 PSI) (690" H2O)
HPS-501-G RANGE - A	 Form 2	0.25 to 1.25 mbar [0.10" to 0.50" H2O]	± 0.25 mbar [± 0.1" H2O]	12 mbar (5" H2O)
HPS-501-G RANGE - B		1.25 to 5.0 mbar [0.50" to 2.0" H2O]	± 0.50 mbar [± 0.2" H2O]	37 mbar (15" H2O)
HPS-501-G RANGE - C		5 to 25 mbar [2" to 10" H2O]	± 1.25 mbar [± 0.5" H2O]	174 mbar (70" H2O)
HPS-501-G RANGE - D		25 to 75 mbar [10" to 30" H2O]	± 10 %	623 mbar (250" H2O)
HPS-501-G RANGE - E		75 to 374 mbar [30" to 150" H2O]	± 10 %	1.4 bar (20 PSI) (550" H2O)
HPS-501-G RANGE - F		374 to 1370 mbar [150" to 550" H2O]	± 10 %	1.7 bar (25 PSI) (690" H2O)
HPS-502-G RANGE - A	 Form 3	0.25 to 1.25 mbar [0.10" to 0.50" H2O]	± 0.25 mbar [± 0.1" H2O]	12 mbar (5" H2O)
HPS-502-G RANGE - B		1.25 to 5.0 mbar [0.50" to 2.0" H2O]	± 0.50 mbar [± 0.2" H2O]	37 mbar (15" H2O)
HPS-502-G RANGE - C		5 to 25 mbar [2" to 10" H2O]	± 1.25 mbar [± 0.5" H2O]	174 mbar (70" H2O)
HPS-502-G RANGE - D		25 to 75 mbar [10" to 30" H2O]	± 10 %	623 mbar (250" H2O)
HPS-502-G RANGE - E		75 to 374 mbar [30" to 150" H2O]	± 10 %	1.4 bar (20 PSI) (550" H2O)
HPS-502-G RANGE - F		374 to 1370 mbar [150" to 550" H2O]	± 10 %	1.7 bar (25 PSI) (690" H2O)
HPS-503-G RANGE - A	 Form 4	0.25 to 1.25 mbar [0.10" to 0.50" H2O]	± 0.25 mbar [± 0.1" H2O]	12 mbar (5" H2O)
HPS-503-G RANGE - B		1.25 to 5.0 mbar [0.50" to 2.0" H2O]	± 0.50 mbar [± 0.2" H2O]	37 mbar (15" H2O)
HPS-503-G RANGE - C		5 to 25 mbar [2" to 10" H2O]	± 1.25 mbar [± 0.5" H2O]	174 mbar (70" H2O)
HPS-503-G RANGE - D		25 to 75 mbar [10" to 30" H2O]	± 10 %	623 mbar (250" H2O)
HPS-503-G RANGE - E		75 to 374 mbar [30" to 150" H2O]	± 10 %	1.4 bar (20 PSI) (550" H2O)
HPS-503-G RANGE - F		374 to 1370 mbar [150" to 550" H2O]	± 10 %	1.7 bar (25 PSI) (690" H2O)

Variohm Group

HPS-500-G Pressure Switch

Herga Technology Ltd

Reference Dimensions (mm)

Form 1
HPS-500 - G

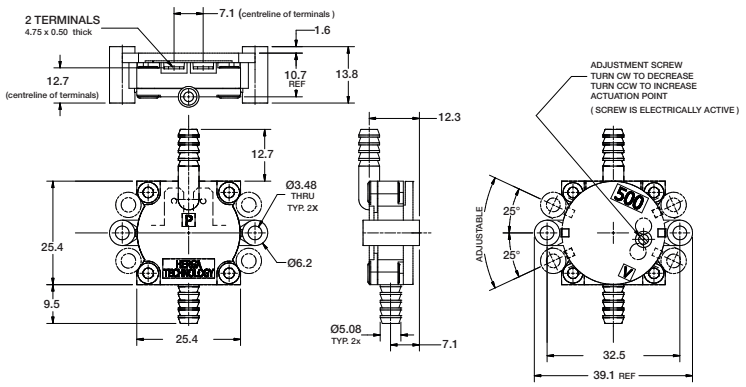

Form 2
HPS-501 - G

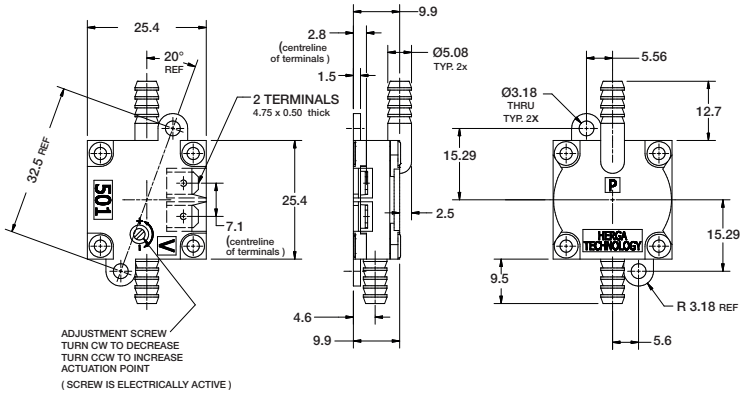

Form 3
HPS-502 - G

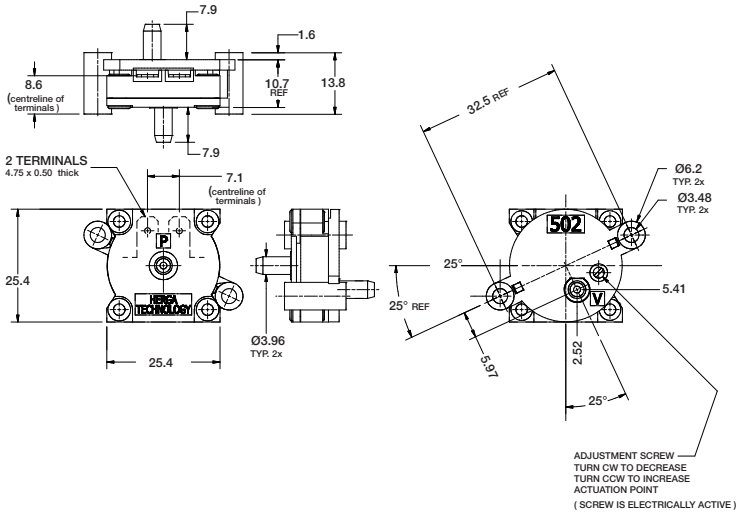

Form 4
HPS-503 - G

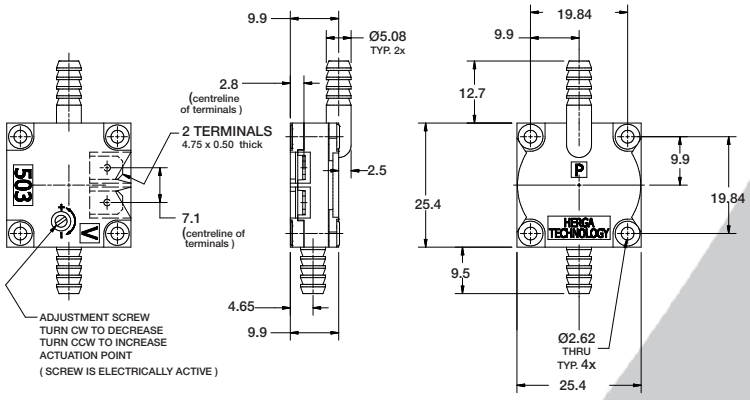

Herga Technology Ltd - Northern Way - Bury St. Edmunds - Suffolk - IP32 6NN - UK
sales@herga.com • www.herga.com • +44 (0)1284 701422

Subject to change without notice