Enclosure Case
With Removable Lid
E006/001 to E006/006
Technical Specification

Product Overview:-

General purpose enclosure case manufactured from aluminium extrusion section with a removable top cover to allow easy access for assembly and installation of component parts.

Specifically developed to offer a stlyish yet robust off the shelf item within which to mount electronic circuitry and components.

The external surface of the enclosure incorparates a series of ribbed fins to aid heat dissipation, T slots have been provided on both the side and base of the enclosure proving mounting facilities.

Multi-position PCB slots have been provided inside of the enclosure case and will except eurocard size PCBs.

The enclosure case is supplied complete with 2 x 1.5mm aluminium end plates, 3mm thick aluminium top cover and stainless steel fixing screws.



Models Availiable :-

Part number	Length (mm)	Width (mm)	Height (mm)	Material	Finish
E006/001	100	105	60.5	Aluminium Type	Black Anodize
E006/002	125	105	60.5	Aluminium Type	Black Anodize
E006/003	165	105	60.5	Aluminium Type	Black Anodize
E006/004	200	105	60.5	Aluminium Type	Black Anodize
E006/005	225	105	60.5	Aluminium Type	Black Anodize
E006/006	285	105	60.5	Aluminium Type	Black Anodize

Options Availiable :-

Mounting Kit:- E007/001
Enclosure Case mounting kit consisting of 2 brackets and mounting screws

Gasket Kit:- E007/002
End Panel Gasket Kit consisting of 2 closed cell neoprene gaskets

Specials:-
The Enclosure case can be supplied in alternative lengths and finishes

In House Maching Services:-
Customised machined features such as holes,slots, cutouts and apertures can be added to the enclosure cases/endplates to match customers requirements.

Outline Drawing:-

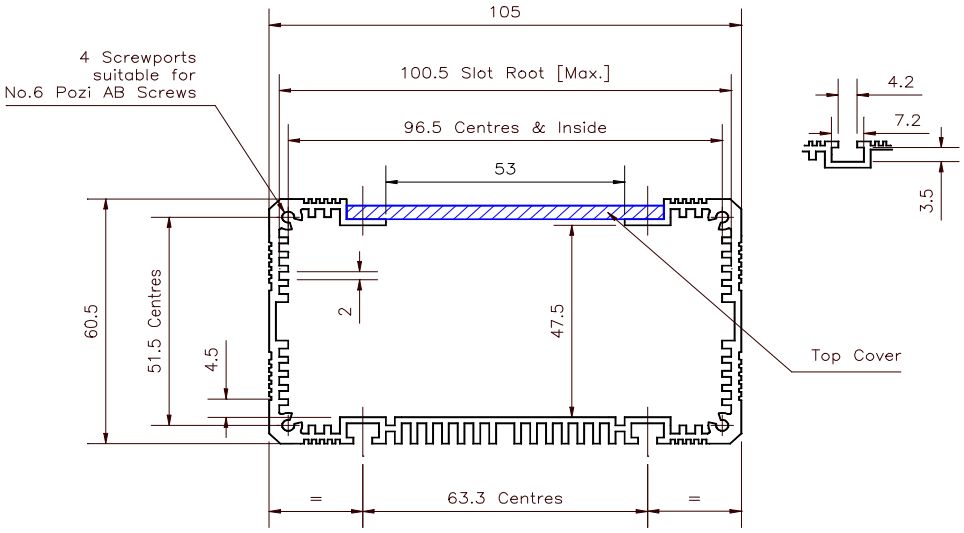

Nu-Tech Engineering Services Limited - Unit 10 Compton Business Park, Poole, Dorset. BH12 4FJ
Tel:- 01202 724100 Email sales@nutech-eng.com
Website www.nutech-eng.com