21130-352 19" TELESCOPIC SHELF FOR VARISTAR, NOVASTAR, EURORACK, 70 KG, RAL 7021, 553W 600D



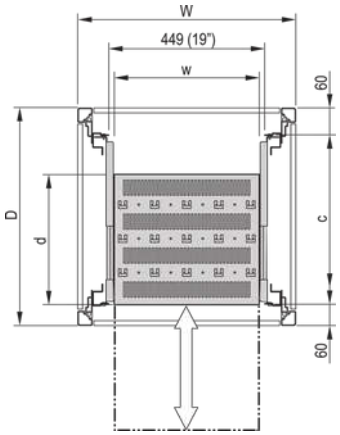

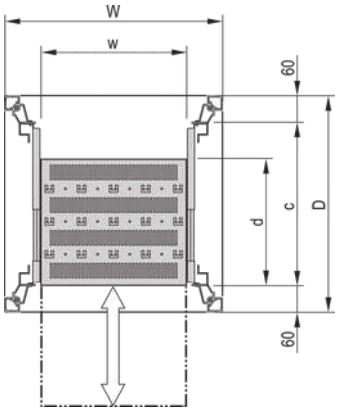

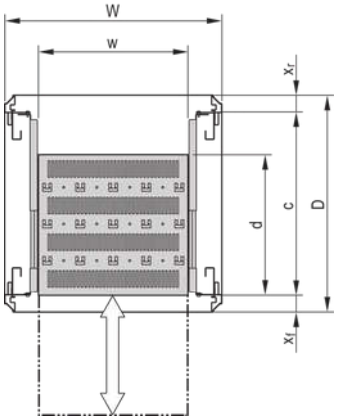

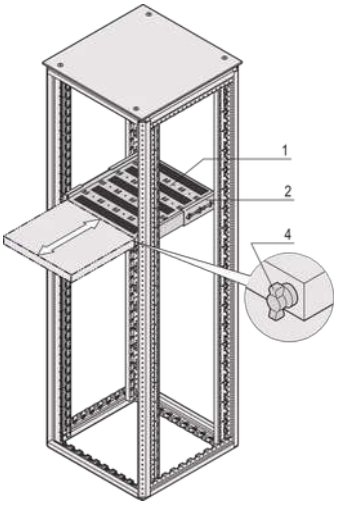

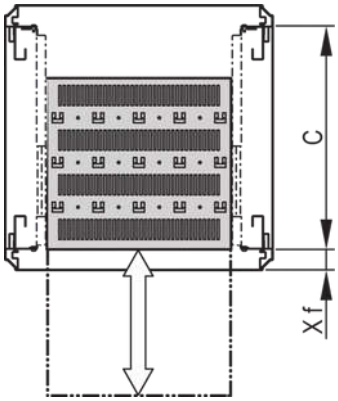

KEY FEATURES

- Perforated cut-outs for assembling cable ties
- Static load-carrying capacity 70 kg
- Incl. telescopic slides
- Locking with T-bar lock possible
- St, 1.5 mm
- Hammer head perforation for assembly with cable ties

PRODUCT ATTRIBUTES

Product Type: Shelf
Product Family: Varistar; Eurorack; Novastar
Type: Equipment Shelf
Works With: Varistar CP
Color: Black Grey
Color Code: RAL 7021
Width: 600 mm
Depth: 382 mm

ADDITIONAL PRODUCT DETAILS

Varistar, Novastar and Eurorack 19'' Shelf, Stationary with 70 kg load capacity, perforated for ease of assembly.

Mounting bracket for assembly of telescopic slide at frame please order separately.

Please order T-bar lock separately.

CERTIFICATIONS

RoHS COMPLIANT

North America
All locations
+1.763.422.2661
Chat with us:
schroff.nvent.com

Europe
Straubenhardt, Germany
+49.7082.794.0
Betschdorf, France
+33.3.88.90.64.90
Warsaw, Poland
+48.22.209.98.35
Assago, Italy
+39.02.932.7141
Chat with us:
schroff.nvent.com

Asia
Shanghai, China
+86.21.2412.6943
Qingdao, China
+86.532.8771.6101
Singapore
+65.6768.5800
Shin-Yokohama, Japan
+81.45.476.0271
Chat with us:
schroff.nvent.com

Middle East & India
Dubai, United Arab Emirates
+971.4.378.1700
Bangalore, India
+91.80.6715.2001
Istanbul, Turkey
+90.216.250.7374
Chat with us:
schroff.nvent.com

nVent

Our powerful portfolio of brands:
nVent.com CADDY ERICO HOFFMAN RAYCHEM SCHROFF TRACER

© 2023 nVent. All nVent marks and logos are owned or licensed by nVent Services GmbH or its affiliates. All other trademarks are the property of their respective owners.

nVent reserves the right to change specifications without notice.