BES 18,0-KH-2S
Order code: BAM00FT

Mounting clamp

BALLUFF
sensors worldwide

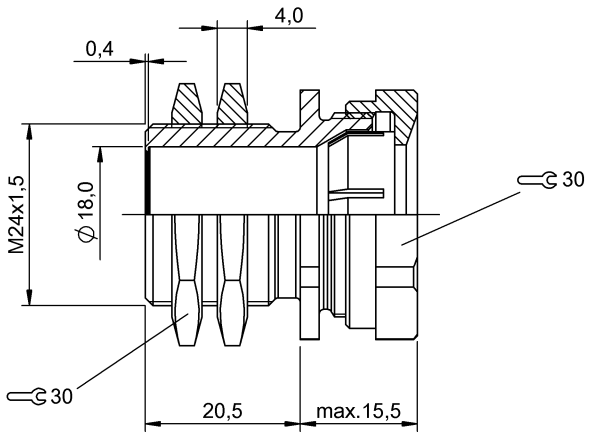

Basic data

Application	Use with sensors Ø18mm and M18
Scope of delivery	Clamp holder (1x) Nut DIN 1763 M24x1.5 (2x)

Mechanical data

Dimensions	30.0 mm x 36.0 mm
Mounting type	screwing/clamping
Tightening torque	25 Nm
Tightening torque for clamping	4.0 Nm
Material	CuZn
Surface protection	Nickel-plated

Remarks

The fixed stop may alter the switching distance of the proximity switch.
The proximity switch is inserted into the clamp holder up to the fixed stop and secured using a pressure screw.
For proximity switches from fixing length 30 mm

Definitions see general catalog

Subject to change without notice.

000000000000/552168/00000000

Internet : www.balluff.com
Balluff Germany : +49 (0) 7158 173-0, 173-370
Balluff USA : 1-800-543-8390
Balluff China : +86 (0) 21-50 644131