251657216

Product Data Sheet

8315100059
VWG0138KULCS
AF172-00059 48V P/2
8.300

ebmpapst
The engineer's choice



GREEN TECH

AF172-00059 48V P/2 8.300

INDEX

1 General 3
2 Mechanics 3
2.1 General 3
2.2 Connections 3
3 Operating Data 5
3.1 Electrical Interface - Input 5
3.2 Electrical Operating Data 6
3.3 Electrical Interface - Output 7
3.4 Electrical Features 8
3.5 Data According ErP Directive 8
3.6 Aerodynamics 9
3.7 Sound Data 10
4 Environment 10
4.1 General 10
4.2 Climatic Requirements 10
4.3 EMC 10
5 Safety 12
5.1 Electrical Safety 12
5.2 Approval Tests 12
6 Reliability 12
6.1 General 12

1 General

Fan type	Fan	
Rotating direction looking at rotor	Counterclockwise	
Airflow direction	Air outlet over struts	
Bearing system	Ball bearing	
Mounting position - shaft	Any	

2 Mechanics

2.1 General

Width	150,0 mm	
Depth	51,0 mm	
Diameter	172,0 mm	
Mass	0,86 kg	
Housing material	Metal	
Impeller material	Plastic	
Max. torque when mounted across both mounting flanges Screw size	Wire outlet corner: 190 Ncm Remaining corners: 190 Ncm ISO 4762 - M4 degreased, without an additional brace and without washer	

2.2 Connections

Electrical connection	Wires	
Lead wire length Tolerance	L = 365 mm +- 10,0 mm	
Tube length Tolerance	S = 15 mm +- 5,0 mm	



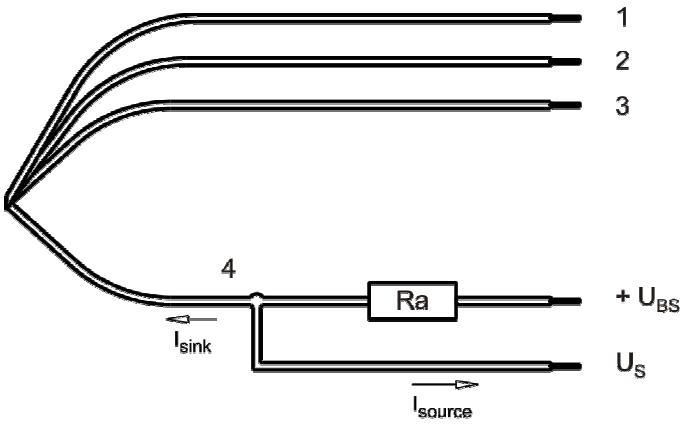

Wire	Color	Operation	Wire size	Insulation diameter
1	red	+ UB	AWG 22	1,7 mm
2	blue	- GND	AWG 22	1,7 mm
3	violet	PWM	AWG 22	1,7 mm
4	white	Tacho	AWG 22	1,7 mm

The auxilliaries shown on the schematic diagram (which are required for the intended use) are not part of our delivery.

3 Operating Data

3.1 Electrical Interface - Input

Control input	PWM

Features

Inpute type	Open collector	
PWM - Frequency		typical: 2 kHz

Characteristics

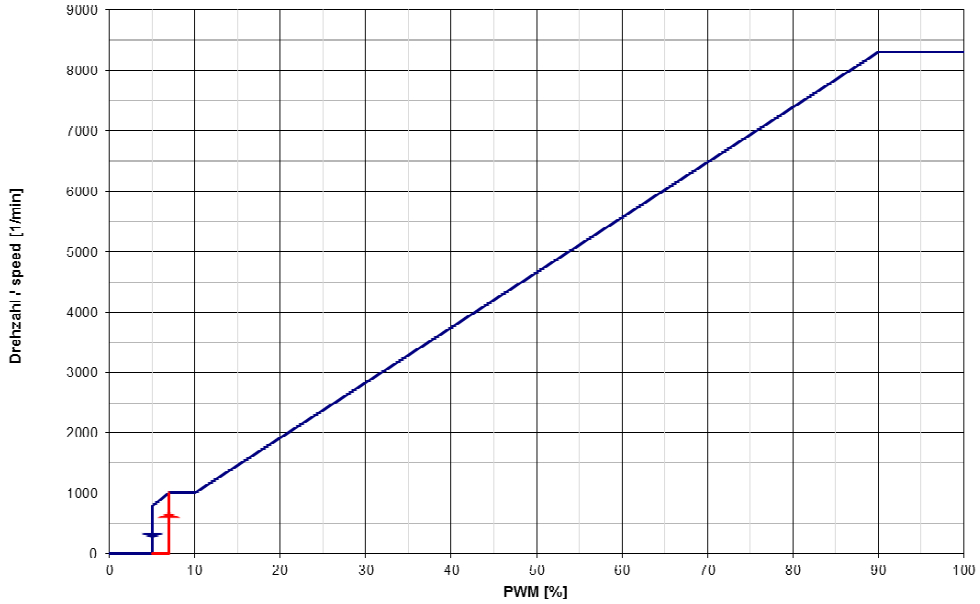

Schematics

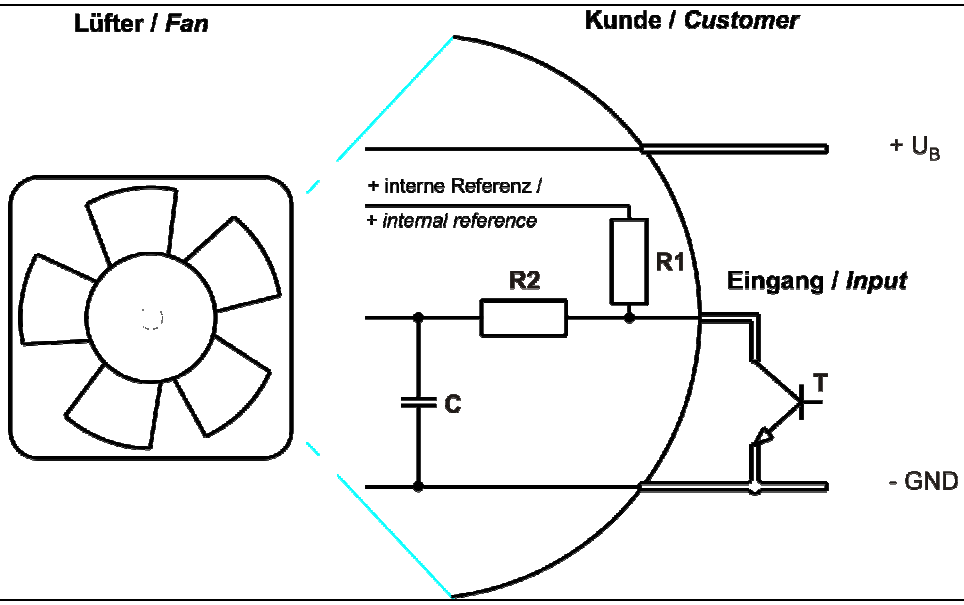

PWM input transistor requirements:
U_{CE}max. => 12 V; I Sink max. > 5 mA; U_{CE}sat. < 0,15 V
Speed control:
By Puls width modulation (PWM) 0 ... 100%

Open collector in relation to signal-ground
f = 2kHz +-20%

Information to the curve:

0% - <=7% PWM:	0 1/min (Fan off)
7% PWM:	1.000 1/min (Start-up, comming from 0% PWM)
7% - 10 % PWM:	1.000 1/min (corresp. to min fan speed)
10% - 90% PWM:	Linear increasing curve
90% - 100% PWM:	8.300 1/min (corresp. to max fan speed)
5% PWM:	800 1/min or 0 1/min (Fan turns off, comming from 100% PWM)

3.2 Electrical Operating Data

Measurement conditions: Normal air density = 1,2 kg/m3; Temperature 23°C +/ - 3°C; Motor axis horizontal; warm-up time before measuring 5 minutes (unless otherwise specified). In the intake and outlet area should not be any solid obstruction within 0,5 m.

Δp = 0: corresp. to free air flow (see chapter aerodynamics)
I: corresp. to arithm. mean current value

Name	**Condition**		
PWM 0001	PWM: 100 %;		

Features	**Condition**	**Symbol**	**Values**		
Voltage range		U	36 V		72 V
Nominal voltage		U_N		48 V	
Power consumption Tolerance	Δp = 0 PWM 0010	P	65 W +- 15 %	98 W +- 15 %	100 W +- 15 %
Current consumption Tolerance	Δp = 0 PWM 0010	I	1.800 mA +- 15 %	2.050 mA +- 15 %	1.400 mA +- 15 %
Speed Tolerance	Δp = 0 PWM 0010	n	7.300 1/min +- 10 %	8.300 1/min +- 10 %	8.300 1/min +- 10 %

3.3 Electrical Interface - Output

Tacho type	/2 (open collector)

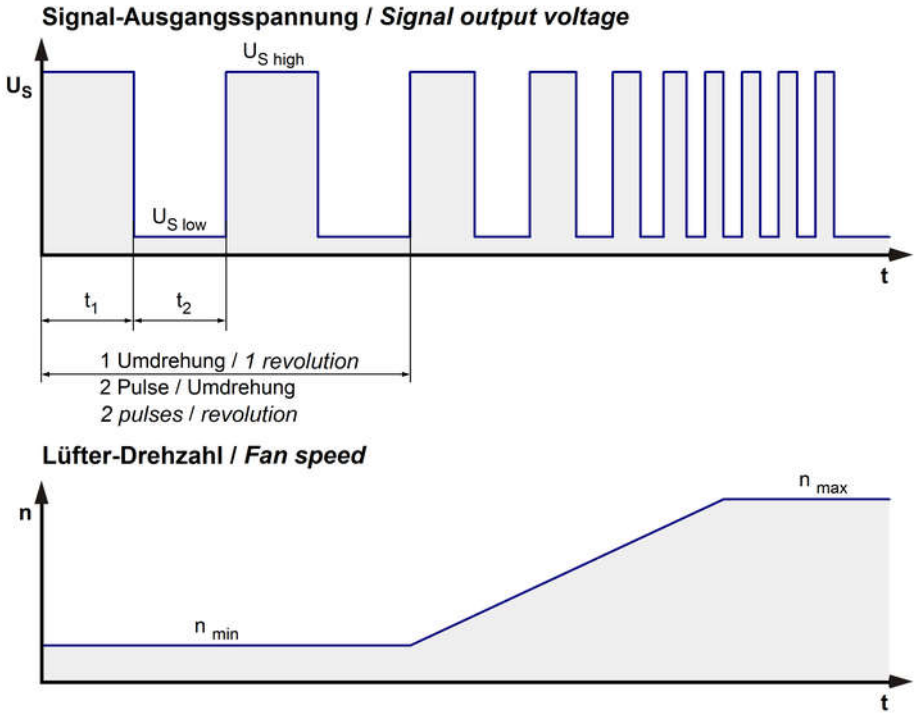

$$Ra = \frac{U_{BS} - U_{S\,low}}{I_{sink}}$$

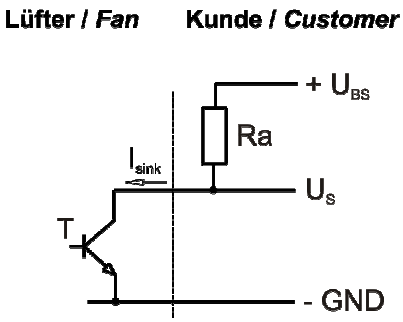

Features		Note	Values
Tacho operating voltage	U_{BS}		<= 60 V
Tacho signal Low	$U_{S\,low}$	I sink: 2 mA	<= 0,4 V
Tacho signal High	$U_{S\,high}$	I source: 0 mA	
Maximum sink current	I_{sink}		<= 20 mA
External resistor		External resistor Ra from UBS to US required. All voltages measured to GND.	
Tacho frequency		(3 x n) / 60	
Tacho isolated from motor		No	
Slew rate			=> 0,5 V/us

n = revolutions per minute (1/min)

3.4 Electrical Features

Electronic function	Speed-Controlled	
Reversed polarity protection Max. residual current at U_N	Rectifying diode I_F <= 5	
Locked rotor protection	Auto restart	
Locked rotor current at U_N	I_{block}	
Clock signal at locked rotor Extended Downtime	t_3 / t_4 typical: 3 s / 10 s t_5: 30 s after 5 start-up tests	
Internal fuse	Littelfuse NANO2 > Very Fast-Acting > 451/453 Series 6,3A / 125V (Art.No.: 045106.3MRL)	
Voltage control *)	Fan turns on at U_B > 34 V or < 74 V Fan turns off at U_B < 32 V or > 76 V	

*) This fan has an undervoltage and overvoltage control circuit integrated which turns the motor off if the voltage is out of range.

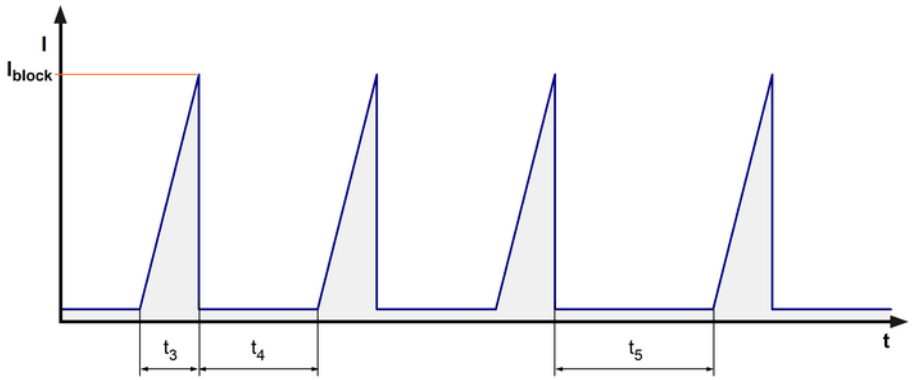

3.5 Data According ErP Directive

Installation / Efficency category	A / static
Speed control	integrated
Specific ratio	1,00636
Target overall efficiency 2015	28,8 %
Overall efficiency	47,1 %
Efficiency grade	40
Power input	170 W
Speed	8.300 1/min

All values measured in optimum energy efficiency point.

Productiondatecode is printed on the fan label.

3.6 Aerodynamics

Measurement conditions:	Measured with a double chamber intake rig acc. to DIN EN ISO 5801. Normal air density = 1,2 kg/m3; Temperature 23℃ +/ - 3℃; In the intake and outlet area should not be any solid obstruction within 0,5 m. Motor shaft horizontal. The information is only valid under the specified test conditions and may be changed by the installation conditions. If there are deviations from the standard test conditions, the characteristic values must be checked under the installed conditions. Power consumption of the fan motor when operating at normal voltage is shown. Depending on the operating conditions of the application, the power input may be higher.

a.) Operation condition:

8.300 1/min at free air flow	PWM 100 %;		

Max. free-air flow (Δp = 0 / $\dot{V}$ = max.)	650 m3/h	
Max. static pressure (Δp = max. / $\dot{V}$ =0)	980 Pa	

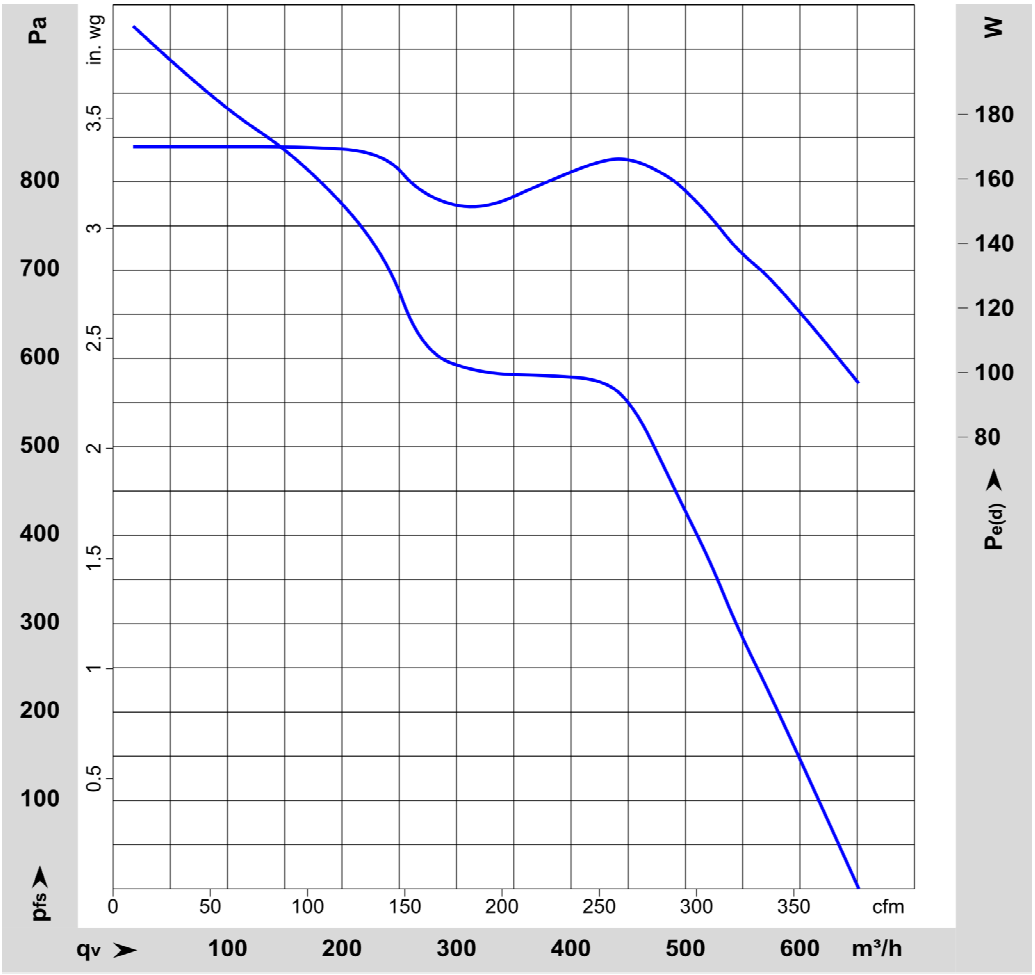

3.7 Sound Data

Measurement conditions:	Sound pressure level: 1 meter distance between microphone and the air intake. Sound power level: According to ISO 13347-3. Measured in a semianchoic chamber with a background noise level of Lp(A) < 5 dB(A) For further measurement conditions see chapter aerodynamics.

a.) Operation condition:

8.300 1/min at free air flow	PWM 100 %;		

Optimal operating point	545 m3/h @ 295 Pa	
Sound power level at the optimal operating point	8,1 bel(A)	
Sound pressure level at free air flow, measured in rubber bands	70 dB(A)	

4 Environment

4.1 General

Min. permitted ambient temperature TU min.	-20 °C	
Max. permitted ambient temperature TU max.	70 °C	
Min. permitted storage temperature TL min.	-40 °C	
Max. permitted storage temperature TL max.	80 °C	

4.2 Climatic Requirements

Humidity requirements	humid heat, constant; according to DIN EN 60068-2-78, 14 days	
Water exposure	None	
Dust requirements	None	
Salt fog requirements	None	

Permitted application area:
The product is intended for use in sheltered rooms with controlled temperature and controlled humidity. Directly exposure to water must be avoided.

Pollution degree 1 (according DIN EN 60664-1)
There is either no pollution or it occurs only dry, non-conductive pollution. The pollution has no negative impact.

Please require severity levels and specification parameters from the responsible development departments.

4.3 EMC

Kind	**Radiated Emission; 30 MHz - 1000 MHz**
According	DIN EN 55032:2016-02
Ceck accuracy / Limit	Class B
Result	Below limit Class B

Kind	**Radiated Emission; 30 MHz - 1000 MHz**
According	DIN EN 55032:2016-02
Ceck accuracy / Limit	Class B
Result	Below limit Class B

Kind	**Electrostatic Discharge Immunity Test**
According	DIN EN 61000-4-2:2001-12
Ceck accuracy / Limit	Contact Discharge +/- 4 kV; Air Discharge +/- 8 kV
Result	A: The monitored function operates as designed during and after exposure to a disturbance.

Kind	**Electromagnetic Field Immunity Test**
According	DIN EN 61000-4-3:2006-12
Ceck accuracy / Limit	10 V/m; 80 - 1000 MHz; AM; m = 0,8; f = 1 kHz; 1%; t = 3 s
Result	A: The monitored function operates as designed during and after exposure to a disturbance.

Kind	**Electrical Fast Transient / Burst Immunity Test**
According	DIN EN 61000-4-4:2005-07
Ceck accuracy / Limit	+/- 2 kV on Power Lines; Coupling: POS, NEG, {PE}, ALL, 5 kHz and 100 kHz; 1 min
Result	A: The monitored function operates as designed during and after exposure to a disturbance.

Kind	**Immunity to Conducted Disturbances, Induced by RF-Fields**
According	DIN EN 61000-4-6:2001-12
Ceck accuracy / Limit	10 Vrms; 150 kHz - 80 MHz; AM; m = 0,8; f = 1 kHz; 1%; t = 3 s
Result	A: The monitored function operates as designed during and after exposure to a disturbance.

5 Safety

5.1 Electrical Safety

Dielectric strength DIN EN 62368 and DIN EN 60335 A.) Type test Measuring conditions: After 48h of storage at 95% R.H. and 25℃. No arcing or breakdown is allowed! All connections together to ground. B.) Routine test Measuring conditions: At indoor climate. No arcing or breakdown is allowed! All connections together to ground.	500 VAC / 1 Min. 850 VDC / 1 Sec.	
Isolation resistance Measuring conditions: After 48h of storage at 95% R.H. and 25℃ measured with U=500 VDC for 1 min.	RI > 10 MOhm	
Clearance / creepage distance	1,0 mm / 1,5 mm	
Protection class	I	

5.2 Approval Tests

CE	EC Declaration of Conformity	Yes
EAC	Eurasian Conformity	Yes
UL	Underwriters Laboratories	Yes / UL507, Electric Fans E38324
VDE	Association for Electrical, Electronic and Information Technologies	Yes / Approval acc. to EN 62368 - Audio/video, information and communication technology equipment
CSA	Canadian Standards Association	Yes / CSA audited by UL according to C22.2 No. 113 Fans and Ventilators
CCC	China Compulsory Certification	Yes / GB 12350 Safety Requirements for small Power Motors

6 Reliability

6.1 General

Life expectancy L10 at TU = 40 ℃	70.000 h	
Life expectancy L10 at TU max.	35.000 h	
Life expectancy L10 acc. to IPC 9591 at TU = 40 ℃	117. 500 h	

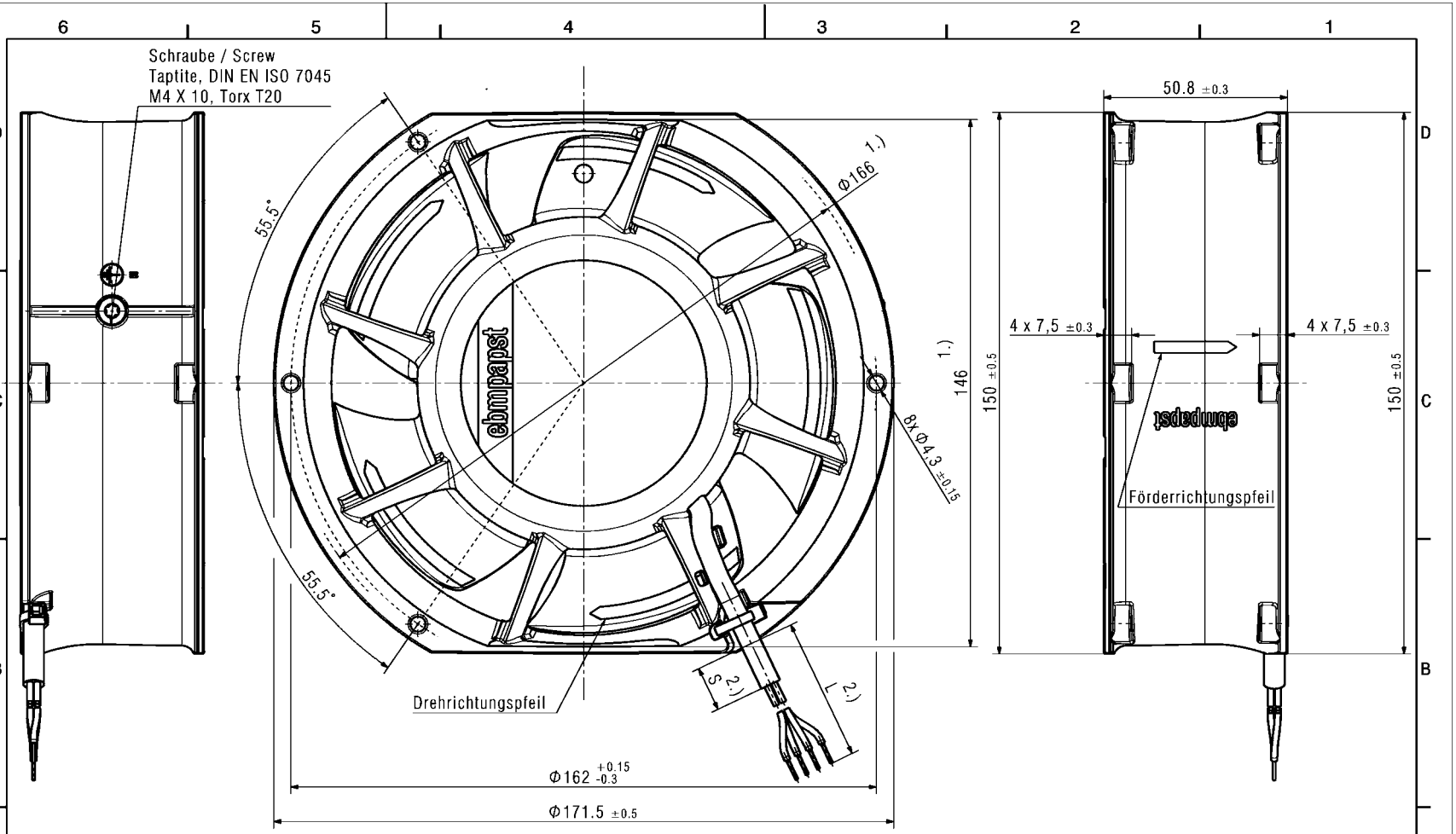

1.) Maße aus Montageausschnitt
2.) Anzahl und Länge der Litzen/Schlauch siehe Produktspezifikation
- Axialspiel der Kugellager mit Feder spielfrei verspannt

1.) measures of mounting cut out
2.) length and number of wires/tube see product specification
- ball bearing without clearance by a pre-load spring

Dokument-Status / Document-State	CATIA-Version/ CATIA-Version	CAD-Umgebung/ CAD-Environment	Werkstoff / Material:	Volumen / Volume (mm^3):
Aend.-Nr./ Change-No.	831510D059 CPR000 -			Gewicht / Mass (g):
	3D-Referenzmodell / 3D-Referencemodel		Titel / Title:	
Tolerierung / Tolerances:	Datum	Name		
	Bearb./ Drawn			
Allgemeintoleranzen / Gen. Tolerances:	Gepr./ Checked		Zchg.-Nr./ Drawing No:	Ers.f.Zchg. / Replaces:
	Freig./ Releas.			
	ebmpapst		Dokumenttyp / Type of Document	Teildokument (Blatt/Page)	Index / Index -	Format / Size:	Massstab/Scale
	ebm-papst St.Georgen GmbH & Co KG			

Copying of this document, and giving it others and the use or communication of the contents thereof, are forbidden without express authority. Offenders are liable to the payment of damages. All rights are reserved in the event of the grant of a patent or the registration of a utility model or design.

Schutzvermerk nach DIN ISO 16016 beachten !
Refer to protection notice DIN ISO 16016 !