Type: ELRP48V-30

Earth Leakage Relay (Variable) - Type A

- **76mm length[1], 48 x 48mm Panel mount housing - Supplied complete with retaining clips and screws**
- **Pluggable connectors located at the rear of the unit and supplied with mating, re-wireable sockets**
- **Designed to monitor and detect true RMS earth fault currents (up to 30A) in conjunction with a separate C.T.**
- **LED bargraph provides constant indication of any leakage current**
- **Microprocessor controlled with internal monitoring (self-checking)**
- **Adjustable Sensitivity (IΔn) - 30mA to 30A**
- **Adjustable Time Delay (Δt) - 0 (instantaneous)* to 10 seconds**
- **Separate "Test" and "Reset" push buttons**
- **Connection facility for remote "Test" and "Reset" push buttons**
- **Toroid open circuit detection forces unit to trip (Red LED flashes during this condition)**
- **2 Relay outputs - Standard Output (S.O.) and Positive Safety Output (P.S.O)**
- **LED indication of Supply status and fault condition after unit has tripped**

[1] behind panel and excluding pluggable connectors.



Front Panel Protection to IP40

FUNCTION DIAGRAM

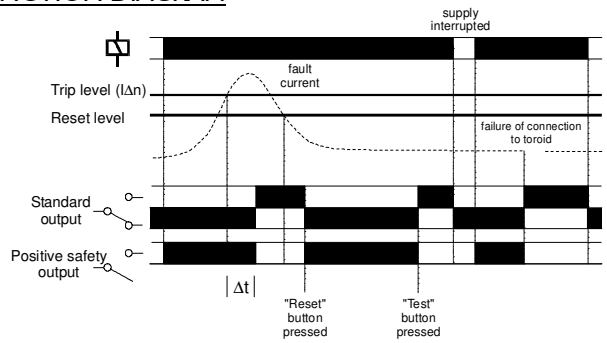

INSTALLATION

- BEFORE INSTALLATION, ISOLATE THE SUPPLY.

Installation work must be carried out by qualified personnel.

- Connect the unit as shown in the diagram below (N.B. certain features may not be required and therefore do not need to be connected).
- Apply power, the green **"supply on"** LED will illuminate and the **"positive safety output"** relay will energise. The relay will de-energise if:
  - a, the fault current level exceeds the set trip level (IΔn) **
  - b, there is a failure of the connection between the relay and the toroid ** (Note the red **"tripped"** LED will flash during this condition)
  - c, the supply to the unit is removed
  - d, the relay fails internally

  ** causes the **"standard output"** relay to energise in response to the fault condition.
- Prior to a fault occurring, the LED bargraph will indicate the % of IΔn being detected (the display is scaled between 25, 50, and 75% of the actual trip level). After all 3 LED's have illuminated and the unit trips due to an excessive fault current, the red **"tripped"** LED will illuminate. The unit will now remain in a latched condition.

Fault simulation (Test mode)

- The unit can be placed into a fault condition by pressing the **"Test"** button on the front of the unit (or by pressing the remote **"Test"** button - if fitted). The output relays operate accordingly.
- Press the **"Reset"** button on the front of the unit (or remotely - if fitted) to reset the unit. The output relays revert back to their "non-tripped" state.
- The unit can also be reset by interrupting the power supply.
- To satisfy regulations, it is recommended that the device be tested periodically to ensure correct operation.

Troubleshooting

- If the unit fails to operate correctly check that all wiring and connections are good.
- For the DC supply version, ensure the polarity to terminals 6 and 7 (A1 and A2) are correct.

Note:

The operating function of this unit is classed as a Type A for which tripping is ensured for residual sinusoidal alternating currents and residual pulsating direct currents, whether applied suddenly or slowly rising. Additionally, this unit is protected against nuisance tripping. This unit will also satisfy the requirements for Type AC devices which only need to detect residual alternating currents.

CONNECTION DIAGRAM

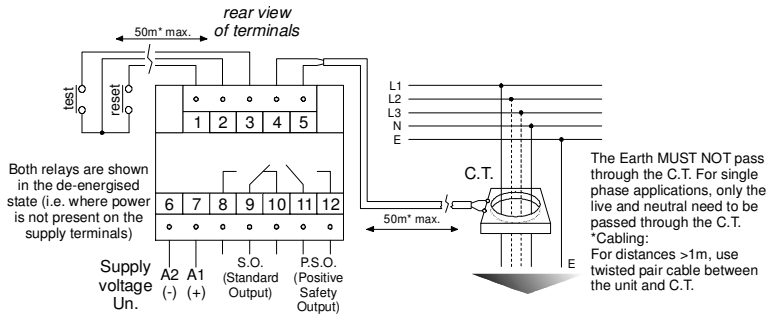

The Earth MUST NOT pass through the C.T. For single phase applications, only the live and neutral need to be passed through the C.T.
*Cabling:
For distances >1m, use twisted pair cable between the unit and C.T.

TECHNICAL SPECIFICATION

Supply voltage Un (6, 7):	12 - 125V DC (85 - 110% of U)
(see connection diagram)	24, 115, 230V AC (85 - 115% of Un)
All AC supplies are galvanically isolated between the supply and the toroid and remote test/reset connections.	
Frequency range:	50/60/400Hz (AC supplies)
Isolation:	Over voltage cat. III
Rated impulse withstand voltage: (1.2 / 50µS) IEC 60664	800V (24V AC supplies), 2.5kV (115V AC supplies) 4kV (230V AC supplies)
Power consumption (max.):	6VA (AC supplies) 5W (DC supplies)
Monitored leakage current:	0 to 30A (15 - 400Hz) (through external toroid with 1000:1 ratio and connected to terminals 4 and 5)
Sensitivity IΔn (see Accessories)	30, 100, 300, 500mA, 1, 3, 5, 10, 20, 30A (user selectable)
Trip level limits:	80 - 90% of IΔn
Reset Value:	≈ 85% of tripped level
Time delay Δt:	0*, 60, 150, 250, 500, 800mS, 1, 2.5, 5, 10 sec. (user selectable)
**Actual delay for "0" or "Instantaneous" is <25mS when fault current @ 5 x IΔn.*	

Please state Supply voltage when ordering.

Note:
1. For IΔn setting of 30mA, the time delay is fixed to 0 (instantaneous) and is not adjustable (i.e. any other time delay cannot be selected when 30mA is set).
2. The unit is factory set to 30mA trip and instantaneous delay. Adjustment of these settings can be made if necessary to suit the requirements of the installation. To prevent tampering of the settings, the clear window can be secured in place using a 2mm or 2.5mm wide cable tie (not supplied).

Reset time:	≈ 2S (from supply interruption)
LED indication:	
Power supply present:	Green
Bargraph:	Green x 3 (25, 50 and 75% of actual trip level)
Tripped:	Red (see "INSTALLATION" to the left)
Memory:	storage of the leakage fault and reset with the "Reset" push button
Ambient temp:	-20 to +55°C (-5 to +40°C in accordance with IEC 60755)
Relative humidity:	+95%
Output :	1 x SPDT, 1 x SPNO relays

Output rating:	S.O. (8, 9, 10)	P.S.O. (11, 12)
AC1 (250V)	8A (2000VA)	6A (1500VA)
AC15 (250V)	2.5A	4A
DC1 (25V)	8A (200W)	6A (150W)

Electrical life:	≥ 150,000 ops at rated load
Dielectric voltage:	2kV AC (rms) IEC 60947-1
Rated impulse withstand voltage:	4kV (1.2 / 50µS) IEC 60664
Remote "Test" / "Reset" (1, 2, 3)	Requires N.O. contacts. (i.e. push buttons)
Minimum trigger time:	>80mS (Actual trigger time = 80mS + Δt setting for remote "test")
Housing:	Black, self-extinguishing noryl UL94 VO (ABS for front plate and rear clip)
IP Protection:	Terminals: IP20. Housing: IP30 (when clips are inserted)
Weight:	≈ 190g (AC power supplies) ≈ 110g (DC power supply)
Mounting:	Through 45 x 45mm panel cut-out and secured to panel using retaining clips/screws (2 of each supplied). Panel thickness 4mm typ.
Terminal conductor size:	≤ 2.5mm²
Approvals:	Conforms to: IEC60755, 60947, 62020, 61543. IEC 61000-4-2, -3, -4, -5 , -6, -12 and -16. CISPR 22. CE and RCM Compliant.

( ) Numbers in brackets shown above refer to terminal numbers on the relay housing.

Options

1. For other supply voltages, alternative trip levels or time delays, please consult the sales office.

Accessories – Toroids (C.T.)

Toroid Type:	Internal diameter:	IΔn (min.) A	Toroid Type:	Internal diameter:	IΔn (min.) A
BZCT035	35mm Ø	0.03	BZCT120	120mm Ø	0.1
BZCT050	50mm Ø	0.03	BZCT160	160mm Ø	0.1
BZCT070	70mm Ø	0.03	BZCT210	210mm Ø	0.3

MOUNTING DETAILS

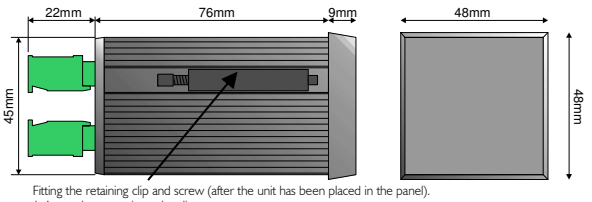

Fitting the retaining clip and screw (after the unit has been placed in the panel).
1. Insert the screw in to the clip.
2. Push the clip in to the side of the housing and slide towards the back until secured in place.

Panel cut-out size: 45 x 45mm

Broyce Control Ltd., Pool Street, Wolverhampton, West Midlands WV2 4HN. England
Tel: +44 (0) 1902 773746 Fax: +44 (0) 1902 420639 Email: sales@broycecontrol.com Web: www.broycecontrol.com

ELRP48V30-4-A.DOCX
1809
ISO 9001:2015
Cert. No. 14125771

The Information provided in this literature is believed to be accurate (subject to change without prior notice); however, use of such information shall be entirely at the user's own risk.