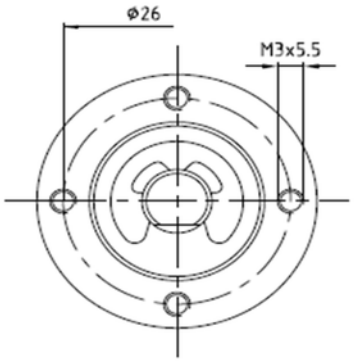

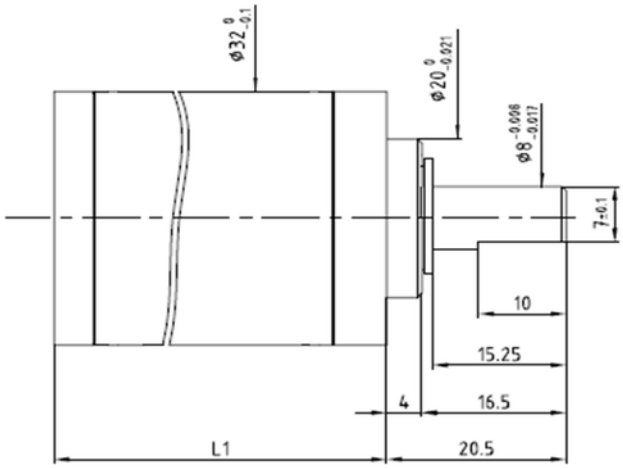

Ratio ****		**5.75**	**17.4**	**24**	**33**	**72.3**	**99.8**	**138**	**190**	**301**	**416**	**574**	**792**	**1090**
1	Number of gear stages	1	2	2	2	3	3	3	3	4	4	4	4	4
2	Direction of rotation	=	=	=	=	=	=	=	=	=	=	=	=	=
3	Efficiency	0.8	0.75	0.75	0.75	0.65	0.65	0.65	0.65	0.55	0.55	0.55	0.55	0.55
4	L1 (mm)	32	38	38	38	44	44	44	44	50	50	50	50	50
5	Weight g (oz)	124 (4.373)	145 (5.114)	145 (5.114)	145 (5.114)	175 (6.172)	175 (6.172)	175 (6.172)	175 (6.172)	205 (7.231)	205 (7.231)	205 (7.231)	205 (7.231)	205 (7.231)
6	Available with Motor - L2 = Length with motor (mm)													
	25GST82.....1/2/3	**75.5**	**81.5**	**81.5**	**81.5**	**87.5**	**87.5**	**87.5**	**87.5**	**93.5**	**93.5**	**93.5**	**93.5**	**93.5**
	25GT82.....6/8	85.45	91.45	91.45	91.45	97.45	97.45	97.45	97.45	103.45	103.45	103.45	103.45	103.45
	28L28.....49	75.5	81.5	81.5	81.5	87.5	87.5	87.5	87.5	93.5	93.5	93.5	93.5	93.5
	28L18.....315	75.5	81.5	81.5	81.5	87.5	87.5	87.5	87.5	93.5	93.5	93.5	93.5	93.5
	28LT12.....49	73.2	79.2	79.2	79.2	85.2	85.2	85.2	85.2	91.2	91.2	91.2	91.2	91.2
	28LT12.....316	76.4	82.4	82.4	82.4	88.4	88.4	88.4	88.4	94.4	94.4	94.4	94.4	94.4
	28D11.....4	93.7	99.7	99.7	99.7	105.7	105.7	105.7	105.7	111.7	111.7	111.7	111.7	111.7
	28DT12.....4	96.6	102.6	102.6	102.6	108.6	108.6	108.6	108.6	114.6	114.6	114.6	114.6	114.6
	28DT12....106	97.8	103.8	103.8	103.8	109.8	109.8	109.8	109.8	115.8	115.8	115.8	115.8	115.8
	30GT82.....4/5	94.9	100.9	100.9	100.9	106.9	106.9	106.9	106.9	112.9	112.9	112.9	112.9	112.9
	35NT32/82.....1/50/35	89.2	95.2	95.2	95.2	101.2	101.2	101.2	101.2	107.2	107.2	107.2	107.2	107.2
	35GLT2R82....1 / 50 / 35	99.2	105.2	105.2	105.2	111.2	111.2	111.2	111.2	117.2	117.2	117.2	117.2	117.2

Characteristics			**R32 2R • 0 • ····**
7	Shaft Bearings		Ball bearing
8	Maximum Static Torque	Nm (oz-in)	20 (2832)
9	Maximum Radial Force		
	@ 8mm from mounting face	N (lb)	180 (40.5)
10	Maximum Axial force	N (lb)	150 (33.75)
11	Maximum press fit force	N (lb)	500 (112.5)
12	Average Backlash @ no-load		1°
13	Average Backlash @ 3 Nm		2°
	Shaft play:		
14	-radial	µm	≤ 10
15	-axial	µm	≤ 10
16	Maximum Recommended Input speed	rpm	6000
17	Operating Temperature Range:	°C (°F)	-30 to +85 (-22 to +185)

Motor + gearbox = L2

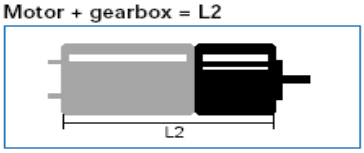

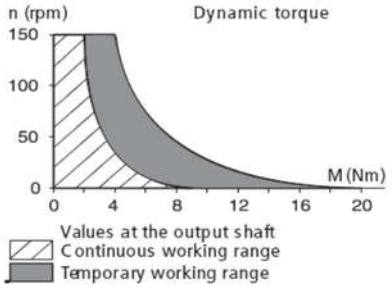

(C) 2013. Portescap. Specifications subject to change without notice.