SRA2 Series
Dual Solid State Relay



- 2 x SSR's in single package
- High load voltage - up to 480VAC
- 4 - 32VDC Control voltage
- Zero crossover switching
- 2 x LED Control input indicators

UK CA CE RoHS Compliant ✓

Output (Load)

Load type		2 x SPST-NO (1 N/O) Resistive
Load current		10A, 15A, 20A, 25A, 30A, 40A
Load switching voltage	AC V_{rms}	24 ~ 240V, 24 ~ 480V
Maximum peak voltage	AC V_{pt}	900V
Minimum load current		0.1A
Inrush current (max.)	10ms	20A: 240A / 25A: 300A / 30A: 380A / 40A: 450A
I^2t	A^2s	20A: 288 / 25A: 450 / 30A: 660 / 40A: 880
Switch type		Zero crossover

Input (control)

Control voltage	VDC	4 ~ 32
Control current	mA	<20
Turn-on voltage (min.)	V_{min}	DC: 3.5
Turn-on voltage (max.)	V_{max}	DC: 35
Turn-off voltage	V	DC: 1

Environmental

Dimensions	L x W x H	57 x 44 x 30.3mm
Weight	approx.	98g

Note:

All SSR's should be protected by fast acting "semiconductor" fuses.

Circuit breakers and normal fuses are not quick enough to protect the SSR in the event of a current surge or spike"

It is recommended that load power is kept to no more than 70% of the SSR's rating to avoid un-expected issues in the event of variations in the load and ambient temperature" These SSR's are designed to be used with a suitable heat sink.

Transfer Pads and Heatsinks for Durakool SSR relays can be found in Durakool's Solid State Relay (SSR) catalogue.

Ordering Code

S R A 2 Z - 2 5 K - D

Series

Switching
Z: Zero Crossover

Load current
10: 10A
15: 15A
20: 20A
25: 25A
30: 30A
40: 40A

Load voltage
K: 24 to 480VAC
L: 24 to 240VAC

Control voltage input
D: 4 ~ 32VDC

Schematic — Fig. 1

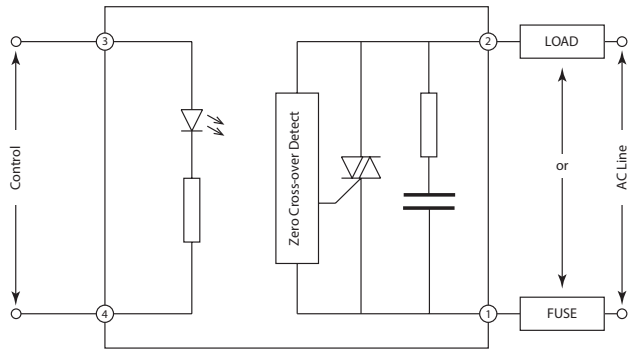

DC Control x 2

Dimensions in mm — Fig. 2

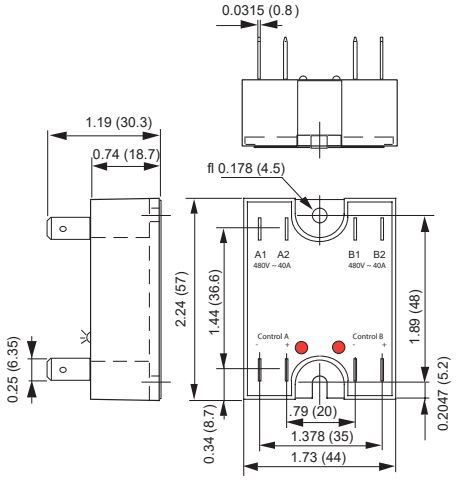

Specifications are subject to change without notice. E&OE.